SPARE PARTS MANUAL

MQ WHITEMAN RIDE-ON TROWEL MODEL STX6H

U.S. Revision #5 (12/04/20)
AUS Version 1.0 (July 2021)

FOR MORE INFORMATION
CONTACT US ON 1300 353 986 OR VISIT flextool.com.au

EXCLUSIVE TO Flextool SINCE 1951

PARTS MANUAL

MULTIQUIP®

WHITEMAN SERIES

MODEL STX6H

HYDRAULIC RIDE-ON TROWEL

(HATZ 4H50TIC DIESEL ENGINE)

Revision #5 (12/04/20)

To find the latest revision of this publication or associated operation manual, visit our website at: www.multiquip.com

THIS MANUAL MUST ACCOMPANY THE EQUIPMENT AT ALL TIMES.

PN: 13407

STX6H Ride-On Trowel

Table of Contents..... 2
Explanation of Code in Remarks Column..... 4
Suggested Spare Parts 5

Component Drawings

Nameplate and Decals Assembly..... 6–7
Frame and Fittings Assembly 8–9
Left Frame Console Assembly..... 10–11
Right Frame Console Assembly 12–13
Front Panel Assembly..... 14–15
Platform Assembly..... 16–17
Cowling Assembly 18–19
Bottom Plate Assembly 20–21
Seat Frame Assembly 22–23
Steering/Pump Stroker Assembly..... 24–25
Electrical Control Panel 26–27
Pivot Assembly 28–29
Hydraulic Steering Assembly..... 30–31
Hydraulic Cylinder Assembly..... 32–33
Hydraulic Heat Exchanger Assembly (R-L) 34–35
Charge Air Cooler Assembly 36–37
Pump Fittings Assembly 38–39
Fixed Pump Fittings Assembly 40–41
Pump Levers Assembly 42–43
Hydraulic Hose Kit Assembly Complete 44–45
Hyd. Hose Assy. (P. Block Ports C1~C4) 46–47
Hyd. Hose Assy. (LH-RH Steering Valves #1).. 48–49
Hyd. Hose Assy. (LH-RH Steering Valves #2).. 50–51
Hyd. Hose Assy. (P. Block/Frame/Tank/Pump). 52–53
Hyd. Hose Assy. (P. Block/Cooler/Pump) 54–55
Hyd. Hose Assy. (Cooler/Motors/Pump) 56–57
Hyd. Hose Assy. (P. Block/P. Stroker/Pump/Filter) .. 58–59
Hyd. Hose Assy. (Test Port) 60–61
Pitch Block Fittings Assembly..... 62–63
Pitch Block Assembly 64–65
Hydraulic Oil Expansion Tank Assembly 66–67
Filter Assembly 68–69
Left-Hand Valve Assembly..... 70–71
Right-Hand Valve Assembly 72–73
Stabilizer Assembly 74–75
6-Blade Spider Assembly (Left-Side) 76–77
6-Blade Spider Assembly (Right-Side)..... 78–79
Spray Assembly (S/N NH2003616 and Below) . 80–81
Spray Assembly (S/N NH2003617 and Above). 82–83
Engine Assembly..... 84–85
Engine Mounting Assembly (Right/Left) 86–87
Exhaust Assembly 88–89
Air Cleaner Assembly 90–91
Fuel System Assembly 92–93
Fuel Pump and Fuel Filter Assembly. 94–95
Battery Assembly..... 96–97
Radiator Mounting Hardware Assembly 98–99
Harness Assembly..... 100–101

NOTICE

Specifications and part numbers are subject to change without notice.

NOTES

EXPLANATION OF CODE IN REMARKS COLUMN

The following section explains the different symbols and remarks used in the Parts section of this manual. Use the help numbers found on the back page of the manual if there are any questions.

NOTICE

The contents and part numbers listed in the parts section are subject to change **without notice**. Multiquip does not guarantee the availability of the parts listed.

SAMPLE PARTS LIST

NO.	PART NO.	PART NAME	QTY.	REMARKS
1	12345	BOLT	1	INCLUDES ITEMS W/%
2%		WASHER, 1/4 IN.		NOT SOLD SEPARATELY
2%	12347	WASHER, 3/8 IN.	1	MQ-45T ONLY
3	12348	HOSE	A/R	MAKE LOCALLY
4	12349	BEARING	1	S/N 2345B AND ABOVE

NO. Column

Unique Symbols — All items with same unique symbol (@, #, +, %, or >) in the number column belong to the same assembly or kit, which is indicated by a note in the "Remarks" column.

Duplicate Item Numbers — Duplicate numbers indicate multiple part numbers, which are in effect for the same general item, such as different size saw blade guards in use or a part that has been updated on newer versions of the same machine.

NOTICE

When ordering a part that has more than one item number listed, check the remarks column for help in determining the proper part to order.

PART NO. Column

Numbers Used — Part numbers can be indicated by a number, a blank entry, or TBD.

TBD (To Be Determined) is generally used to show a part that has not been assigned a formal part number at the time of publication.

A blank entry generally indicates that the item is not sold separately or is not sold by Multiquip. Other entries will be clarified in the "Remarks" Column.

QTY. Column

Numbers Used — Item quantity can be indicated by a number, a blank entry, or A/R.

A/R (As Required) is generally used for hoses or other parts that are sold in bulk and cut to length.

A blank entry generally indicates that the item is not sold separately. Other entries will be clarified in the "Remarks" Column.

REMARKS Column

Some of the most common notes found in the "Remarks" Column are listed below. Other additional notes needed to describe the item can also be shown.

Assembly/Kit — All items on the parts list with the same unique symbol will be included when this item is purchased.

Indicated by:

"INCLUDES ITEMS W/(unique symbol)"

Serial Number Break — Used to list an effective serial number range where a particular part is used.

Indicated by:

"S/N XXXXX AND BELOW"
"S/N XXXX AND ABOVE"
"S/N XXXX TO S/N XXX"

Specific Model Number Use — Indicates that the part is used only with the specific model number or model number variant listed. It can also be used to show a part is NOT used on a specific model or model number variant.

Indicated by:

"XXXXX ONLY"
"NOT USED ON XXXX"

"Make/Obtain Locally" — Indicates that the part can be purchased at any hardware shop or made out of available items. Examples include battery cables, shims, and certain washers and nuts.

"Not Sold Separately" — Indicates that an item cannot be purchased as a separate item and is either part of an assembly/kit that can be purchased, or is not available for sale through Multiquip.

STX6H HYDROSTATIC RIDE-ON TROWEL

1 to 3 units

Qty.	P/N	Description
1	42732	RADIATOR HOSE, UPPER
1	42745	RADIATOR HOSE, LOWER
1	42602-04	PUMP, FUEL
1	42799	CAP, FUEL
1	42551	HYD. OIL EXP. TANK CAP
1	22746	HYD. OIL TEMP. SENSOR
1	22725-200	FUSE, 20 AMP, J CASE
1	22725-600	FUSE, 60 AMP, J CASE
1	23959	SWITCH, IGNITION
1	23959-01	SWITCH, IGNITION KEY
1	42615-1	FILTER, HYD. HP ELEMENT
1	42616-1	FILTER, HYD. MED. ELEMENT
1	42702-1	ELEMENT, AIR FILTER

HATZ 4H50TIC DIESEL ENGINE

1 to 3 units

Qty.	P/N	Description
1	42602-15	PRE FUEL FILTER
1	42602-18	FUEL FILTER
4	42602-71	POLY V-BELT 768
1	42602-68	OIL FILTER
1	42602-34	OIL SEP. CRANK. BREATHER

NOTICE

Part numbers on this Suggested Spare Parts list may supersede/replace the part numbers shown in the following parts lists.

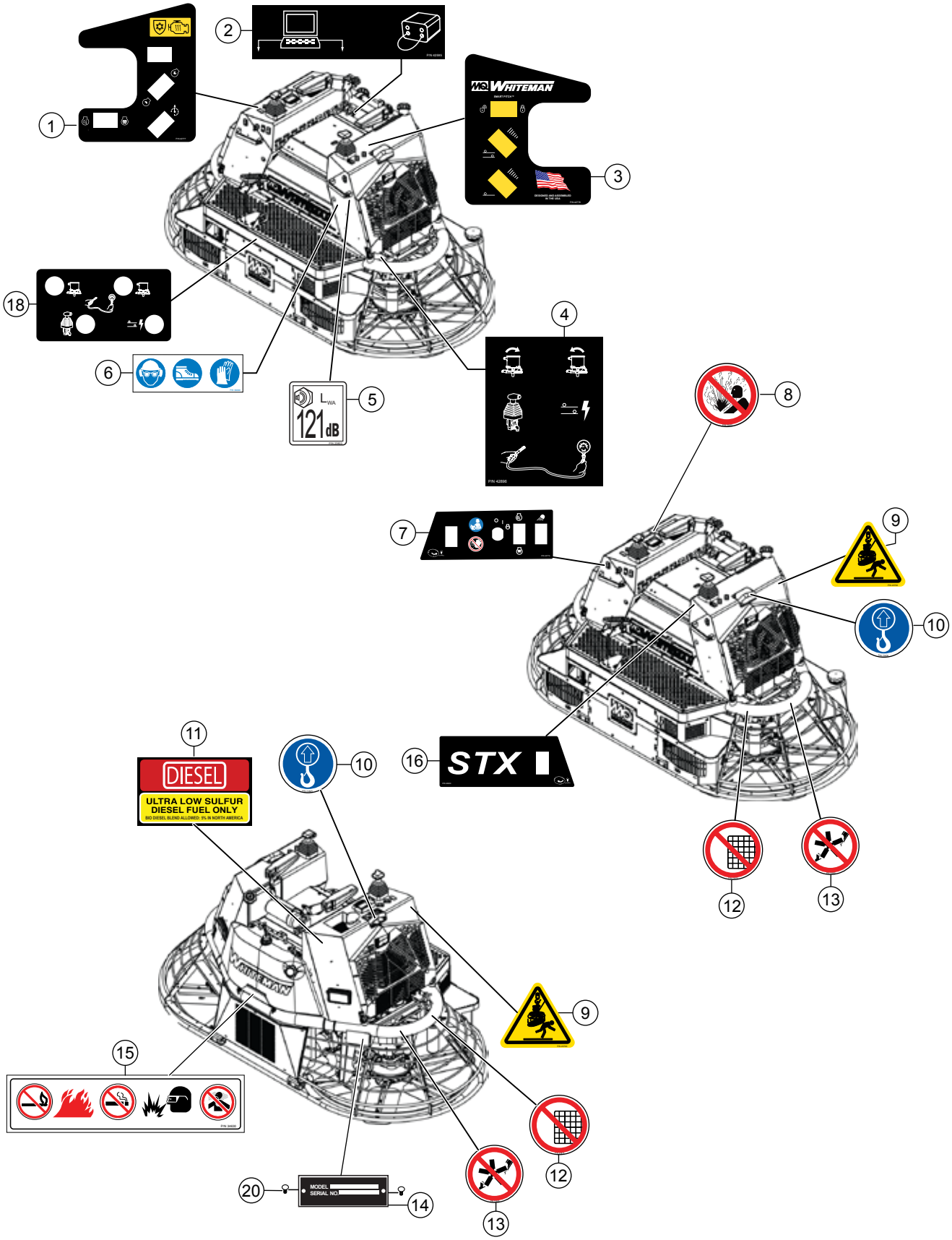
1
2
3
4
5
121 dB
6
7
8
9
10
11
DIESEL
ULTRA LOW SULFUR
DIESEL FUEL ONLY
10
16
STX
12
13
9
15
12
13
20
MODEL
SERIAL NO.
14
18

NAMEPLATE AND DECALS ASSY.

NO.	PART NO.	PART NAME	QTY.	REMARKS
1	42777	DECAL ISO, RH CONSOLE TOP	1	
2	42595	DECAL ISO, SERVICE TOOL AND SET UP JUMPER	1	
3	42778	DECAL ISO, LH CONSOLE TOP OVERLAY	1	
4	42896	DECAL ISO, PRESSURE TEST PORTS	1	
5	23803-121	DECAL ISO, GUARANTEED SOUND 121 dBA	1	
6	36099	DECAL ISO, PROTECTIVE CLOTHING, 3.50” X 1.13”	1	
7	42779	DECAL ISO, RH CONSOLE FRONT OVERLAY	1	
8	23875	DECAL ISO, HOT COOLANT, 2” DIA.	1	
9	23700	DECAL ISO, LIFTING/CRUSH, 2.4” X 2.0” DIA.	2	
10	34626	DECAL ISO, LIFTING POINT 2.00” DIA.	2	
11	42970	DECAL DIESEL FUEL	1	
12	23874	DECAL ISO, DO NOT REMOVE GUARDS HZRD, 2.00” DIA.	2	
13	23698	DECAL ISO, ROTATING BLADE HAZARD, 2.00” DIA.	2	
14		SERIAL PLATE	1	CONTACT MQ PARTS
15	34630	DECAL ISO, FIRE, EXP., SMOKING HAZ 6.50” X 1.40”	1	
16	42909	DECAL ISO, LH CONSOLE FRONT OVERLAY	1	
18	42976	DECAL ISO, DIAGNOSTIC PORT ORVERLAY	1	
20	4014	SCREW, 2-3/16" P-K TYPE U-DRIVE	4	

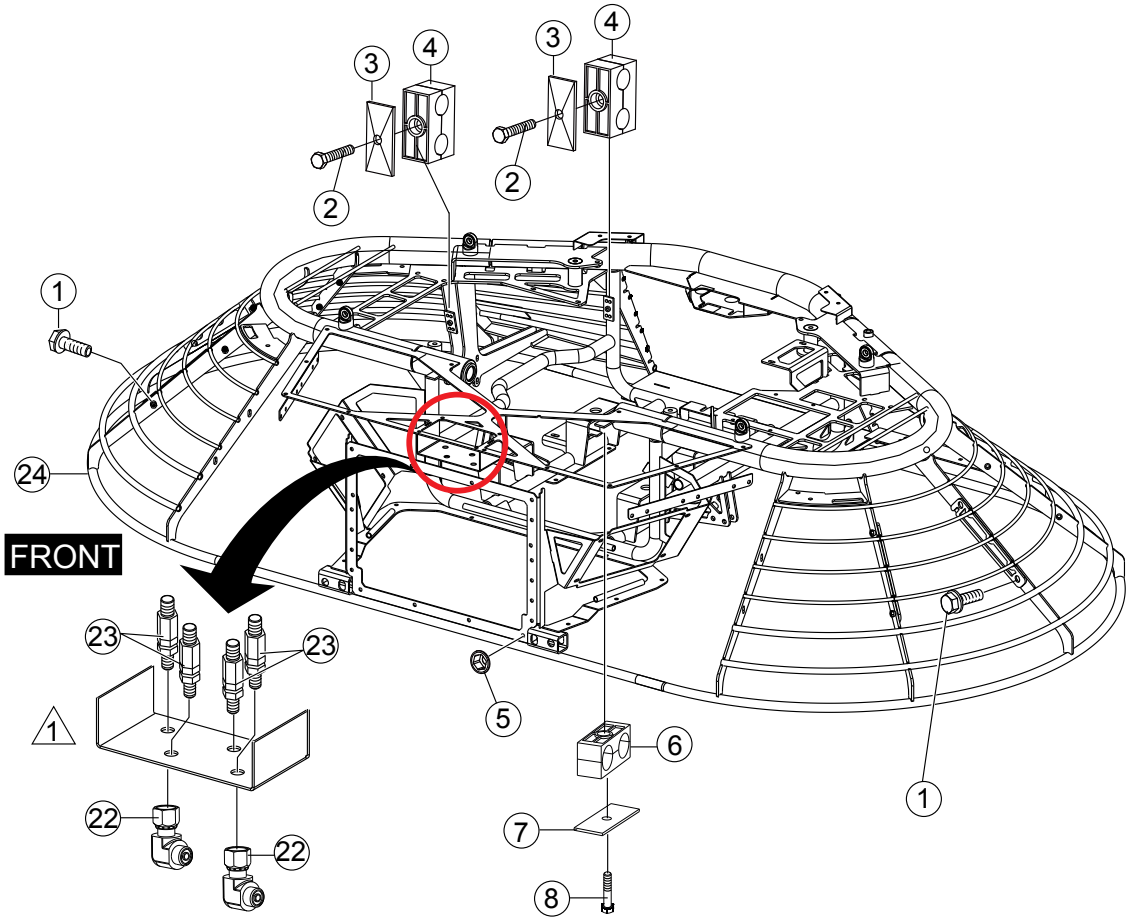

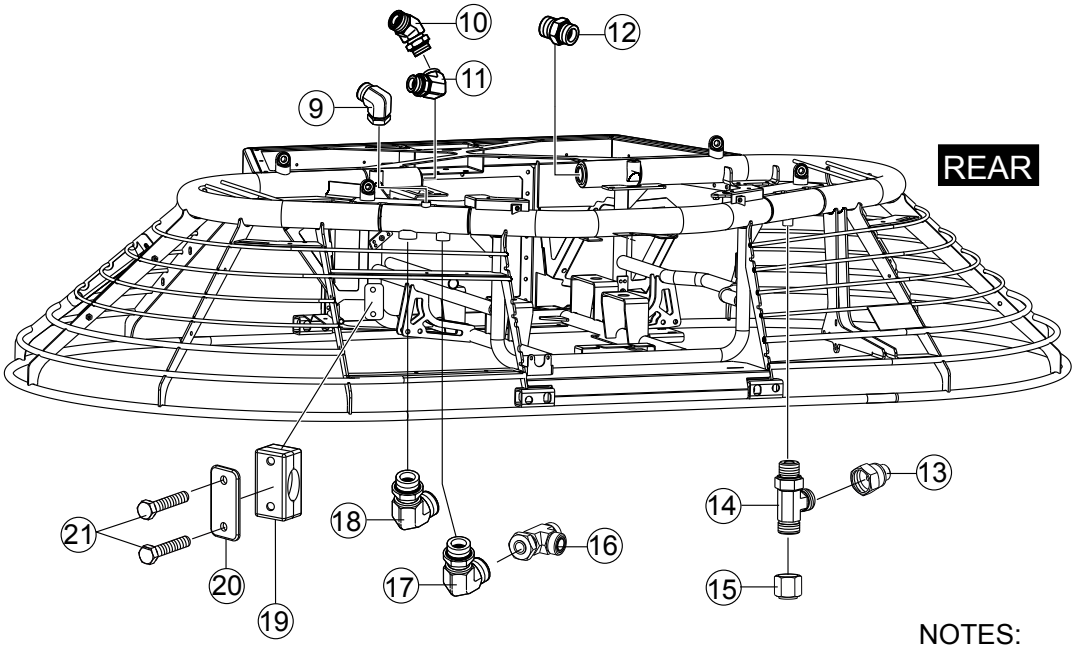

NOTES:

1 TEST PORT

FRAME AND FITTINGS ASSY.

NO.	PART NO.	PART NAME	QTY.	REMARKS
1	42436	SCREW, HFS, ZP, M8-1.25 X 25	8	
2	1207	SCREW, HHC 5/16"-18 X 1-3/4"	2	
3	20912	COVER, 0.75 OD TUBE	2	
4	20913	CLAMP, 0.75 OD TUBE	2	
5	42496	RIVNUT FASTENER, HALF HEX LONG FLANGE M6 X 1.0	1	
6	20911	CLAMP, 1.13" OD. TUBE	2	
7	20910	COVER, 1.13" TUBE	2	
8	0300 A	SCREW, HHC 5/16"-18 X 2	2	
9	32733	FITTING, 90° 4MORFS X 6MOR	1	
10	32732	FITTING, 45° 16FORFS X 16MORFS	1	
11	32339	FITTING, 90° 16MORFS X 20MOR	1	
12	42938	FITTING, STRAIGHT 16MORFS X 20MOR	2	
13	32728	FITTING, STRAIGHT 8FORFS X 4MORFS	1	
14	32727	FITTING, TEE 8MO X 8MORFS RUN	1	
15	32729	FITTING, CAP 8FORFS	1	
16	32731	FITTING, TEE 12FORFS X 12MORFS RUN	1	
17	32362	FITTING, 90° 12MOR X 12MORFS	1	
18	42974	FITTING, 90° 16MOR X 12MORFS	1	
19	32522	CLAMP, MID SECTION-2BOLT	1	
20	32521	PLATE, TOP, 2 BOLT	1	
21	32523	SCREW, HHC M6-1 X 45 MM	2	
22	32519	FITTING, 90° 4FORFS X 4MORFS	2	
23	32446	FITTING, SERVICE PORT -4MJ BLKHEAD	4	
24	42470	FRAME, MAIN	1	

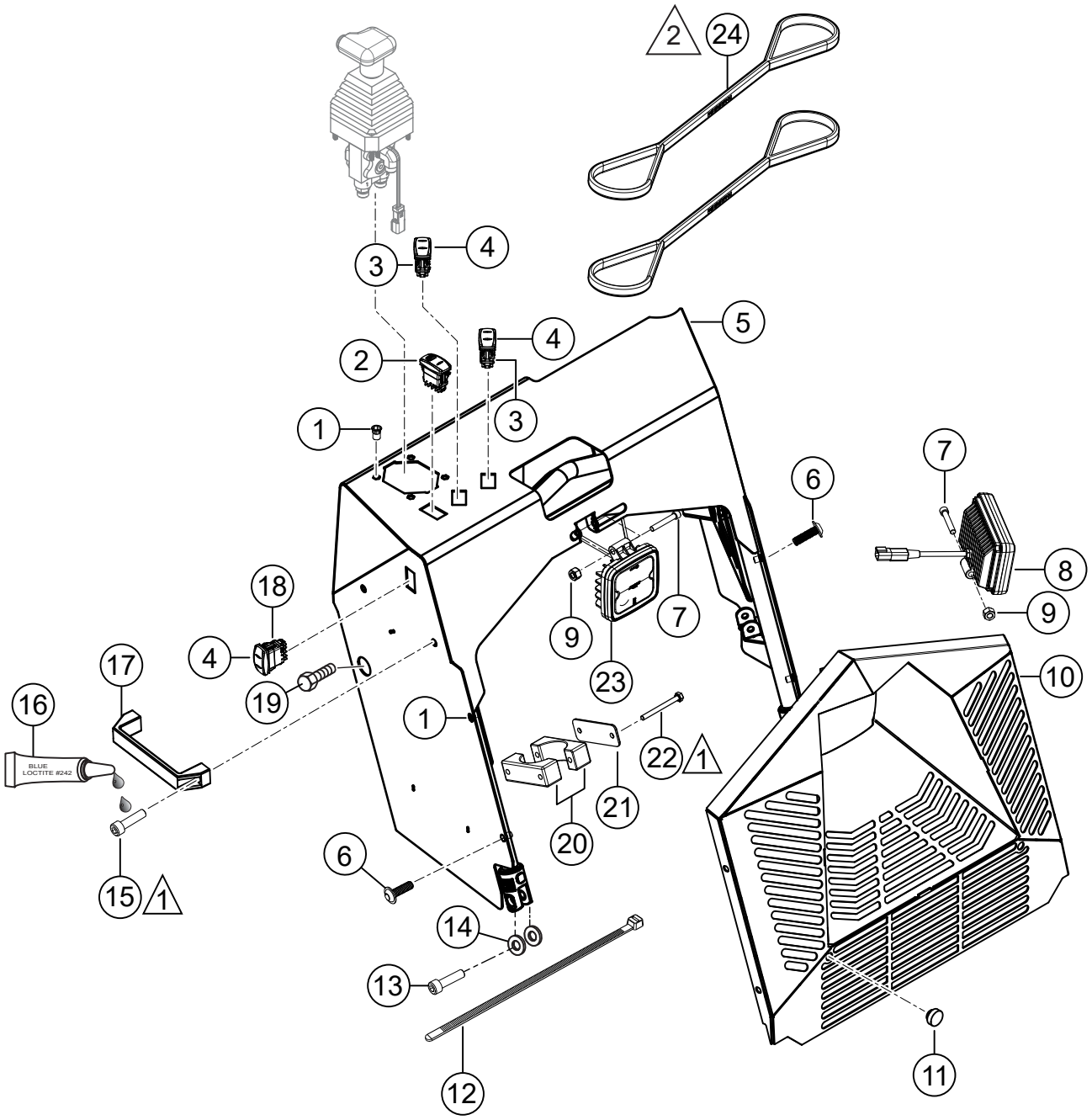

NOTES:

1 APPLY LOCTITE #242

2 ATTACH LIFTING SLING

LEFT FRAME CONSOLE ASSY.

NO.	PART NO.	PART NAME	QTY.	REMARKS
1	42496	RIVNUT, HALF HX BODY, LARGE FLANGE	8	
2	42180-002	SWITCH, LOCK ROCKER	1	
3	42178-001	SWITCH BASE	2	
4	42179-001	ACTUATOR	3	
5	42769	CONSOLE, TIER 4 LEFT SEAT FRAME	1	
6	42325	SCREW, BHC, M6-1.0 X 20, FLANGED	6	
7	2186	SCREW, SHC 5/16"-18 X 2-1/4" PLTD	2	
8	42263	LIGHT, LED 20W 6 EMITTERS 60°	1	
9	5283	NUT, NYLOC 5/16"-18	2	
10	42324	COVER, GEN 3 LEFT END	1	
11	21597	BUMPER, STEM	2	
12	42315	TIE, CABLE	6	
13	9162	SCREW, SHOULDER M16 X M25 M12-1.75 ZINC	2	
14	23303	BUSHING, SEAT FRAME	4	
15	24244	SCREW, SHC M8-1.25 X 20 MM	2	
16	1477	LOCTITE™ #242 BLUE 0.5 CC BOTTLE	1	
17	20674	HANDLE, GRAB	1	
18	42178-003	SWITCH BASE	1	
19	42347	SCREW, HFS, ZP, M6-1.0 X 30	2	
20	32475-C	BODY, CLAMP 2" DIA. 2 HOLE	1	
21	32475-B	PLATE, COVER #6-2 HOLE	1	
22	32475-D	SCREW, HHC M6-1 X 72 MM	2	
23	42262	LIGHT, LED 20W 4 EMITTERS 60°	1	
24	23165	SLING, LIFTING	2	

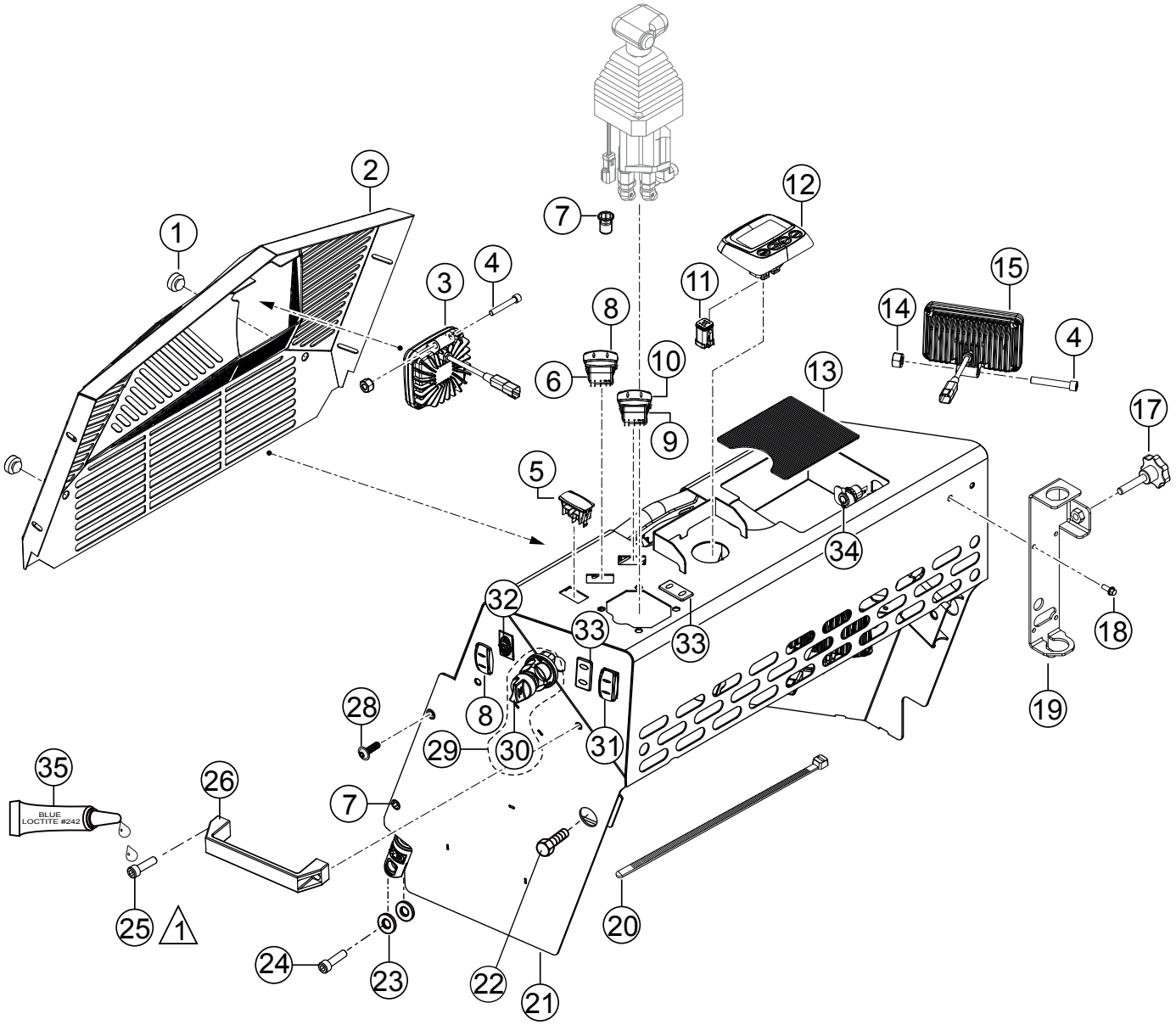

NOTES:

1 APPLY LOCTITE™ #242

NO.	PART NO.	PART NAME	QTY.	REMARKS
1	21597	BUMPER, STEM	2	
2	42169	COVER, GEN 3 RIGHT END	1	
3	42262	LIGHT, LED 20W 4 EMITTERS 60°	1	
4	2186	SCREW, SHC 5/16"-18 X 2-1/4"	2	
5	42781	PLUG, CONSOLE SWITCH	1	
6	42178-001	SWITCH BASE	1	
7	42496	RIVNUT, HALF HX BODY, LARGE FLANGE	8	
8	42179-001	ACTUATOR	3	
9	42178-004	SWITCH BASE	1	
10	42179-002	ACTUATOR	1	
11	42782	CON. HOUSING, 6 POS, FEM., PLUG	1	
12	42748	DISPLAY	1	
13	42552	MAT, RUNNER ACCESORY TRAY	1	
14	5283	NUT, NYLOC 5/16"-18	2	
15	42263	LIGHT, LED 20W 6 EMITTERS 60°	1	
17	42839	SCREW, THUMB M10-1.5 X 50	1	
18	42542	SCREW, HFS, M6-1.0 X 16 ZP	4	
19	42838	HOLDER, UMBRELLA	1	
20	42315	TIE, CABLE	6	
21	42770	CONSOLE, TIER 4 RIGHT SEAT FRAME	1	
22	42347	SCREW, HFS, ZP, M6-1.0 X 30	2	
23	23303	BUSHING, SEAT FRAME	4	
24	9162	SCREW, SHOULDER M16 X M25 M12-1.75	2	
25	24244	SCREW, SHC M8-1.25 X 20 MM	2	
26	20674	HANDLE, GRAB	1	
28	42325	SCREW, BHC, M6-1.0 X 20, FLANGED	4	
29	23959	SWITCH, IGNITION	1	INCLUDES ITEMS W/#
30#	23959-01	KEY, IGNITION SWITCH	1	
31	42178-002	SWITCH BASE	1	
32	42178-003	SWITCH BASE	1	
33	42181-001	INDICATOR, CONTURA VP SERIES	2	
34	42780	ACCESSORY PORT, USB POWER	1	
35	1477	LOCTITE™ # 242 BLUE 0.5 CC BOTTLE	1	

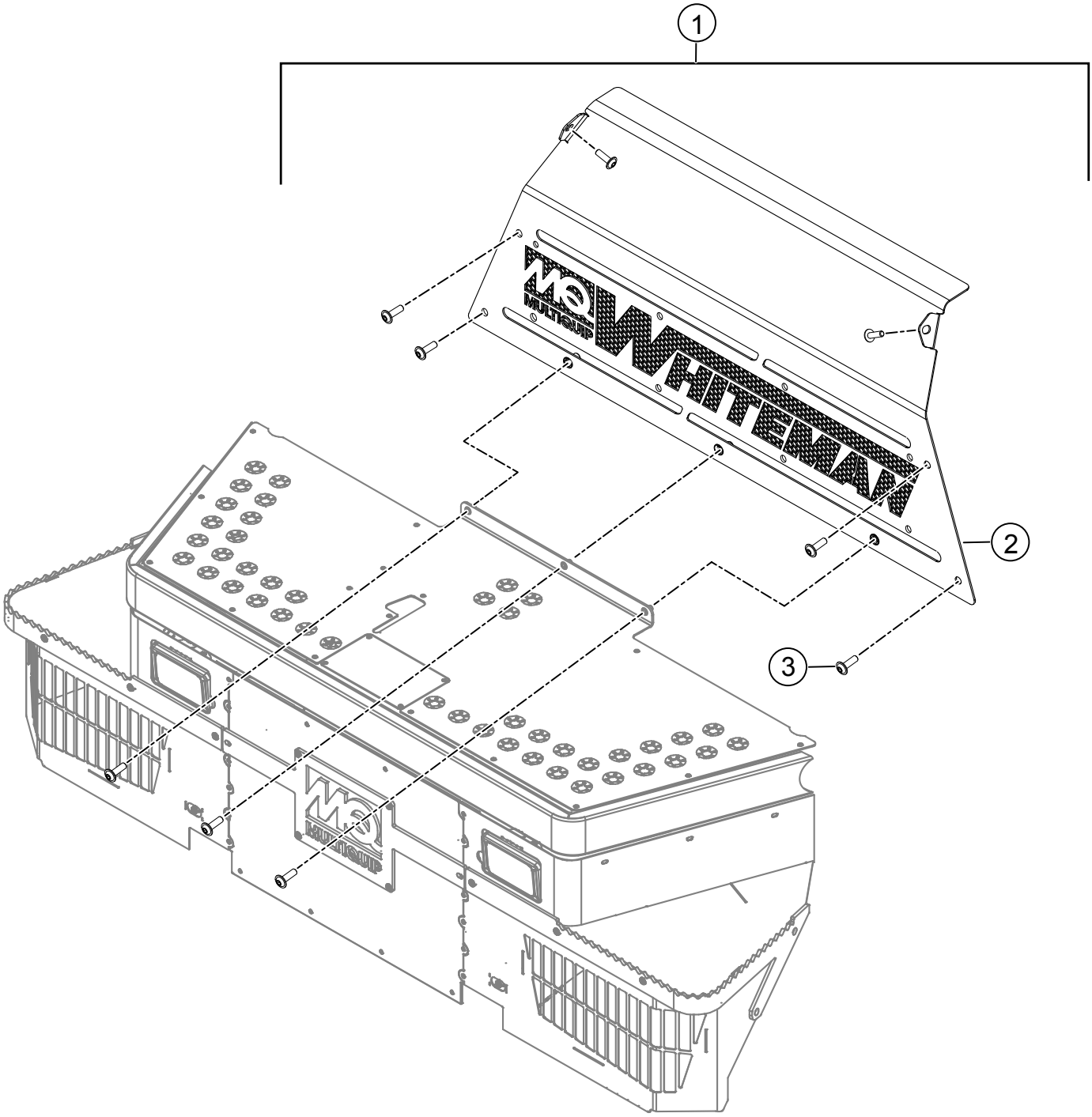
1
2
3
WHITEMAN
MULTIQUIP

FRONT PANEL ASSY.

NO.	PART NO.	PART NAME	QTY.	REMARKS
1	42933	PANEL, FRONT, ASSEMBLY	1	INCLUDES ITEMS W/#
2#	42932	PANEL, FRONT	1	
3#	42325	SCREW, BHC, M6-1.0 X 20, FLANGED	9	

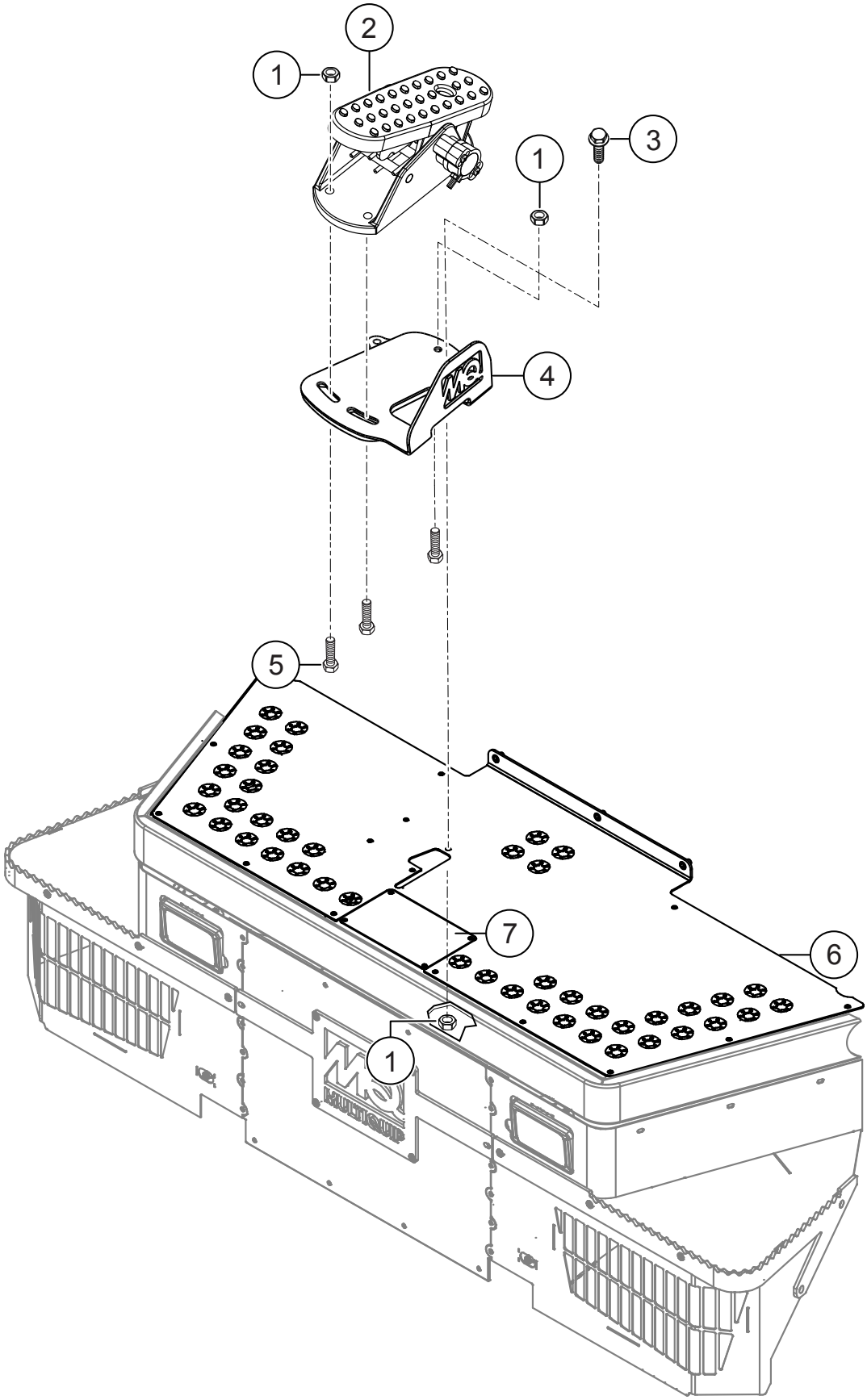
2
1
1
3
4
5
7
6
1

NO.	PART NO.	PART NAME	QTY.	REMARKS
1	42344	NUT, NYLOC M8-1.25	5	
2	42197	PEDAL, FOOT	1	
3	42436	SCREW, HFS, ZP, M8-1.25 X 25 MM	2	
4	42491	FOOT PEDAL, EXTENSION	1	
5	1605	SCREW, HHC M8-1.25 X 25 MM	3	
6	42688	PANEL, FOOT PLATFORM TOP	1	
7	42717	COVER, DIAGNOSTIC PORT	1	

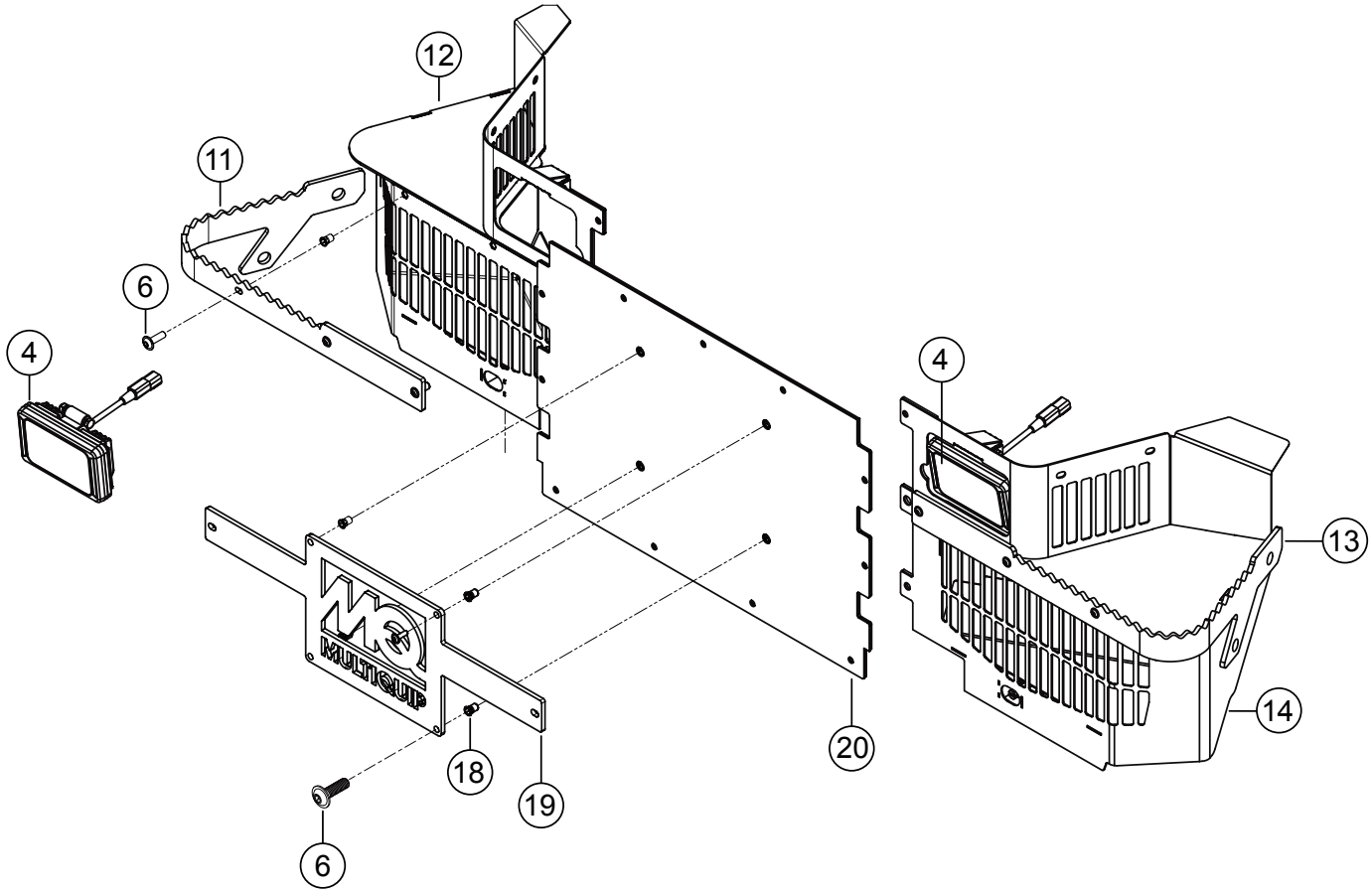
12
11
6
4
4
13
14
20
18
19
6
MULTIQUIP

NO.	PART NO.	PART NAME	QTY.	REMARKS
4	42263	LIGHT, LED 20W 6 EMITTERS 60°	2	
6	42134	SCREW, BHCS FLANGE SS	10	
11	42510	BADGE, GEN 3 FOOT PLATFORM TRIM	1	
12	42485	COWLING, RH COOLER MODULE	1	
13	42741	BADGE, LEFT FOOT PLATFORM TRIM	1	
14	42740	COWLING, LH COOLER MODULE	1	
18	42496	RIVNUT FASTENER, HALF HEX, M6 X 1	10	
19	42667	BADGE, MIDDLE FOOT PLATFORM	1	
20	42678	PANEL, FOOT PLATFORM CENTER	1	

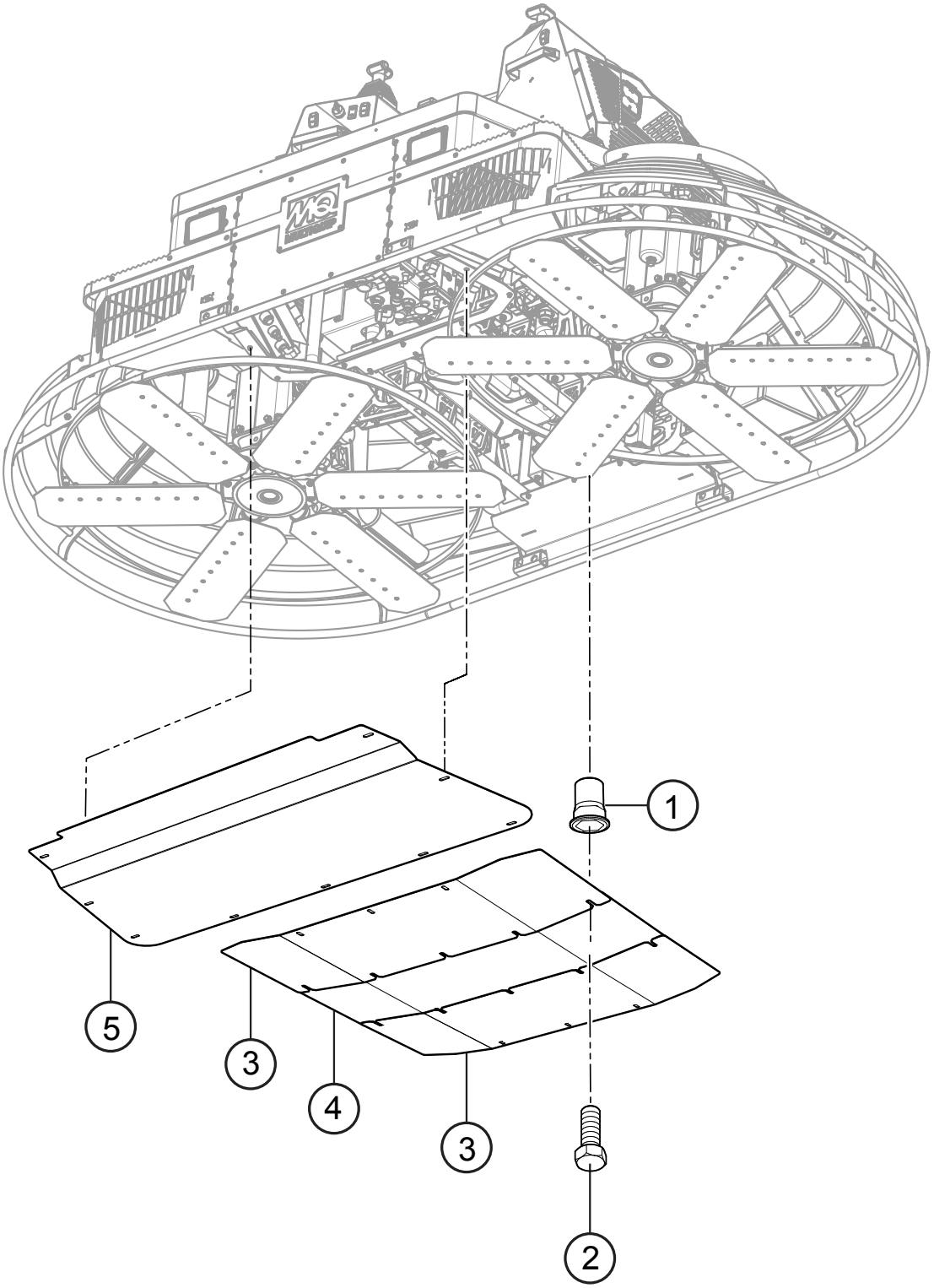
1
5
3
4
3
2

BOTTOM PLATE ASSY.

NO.	PART NO.	PART NAME	QTY.	REMARKS
1	42496	RIVNUT FASTENER, HALF HEX LONG FLANGE M6 X 1	14	
2	42347	SCREW, HFS, ZP, M6-1.0 X 30	49	
3	42828	PLATE, END SKID	2	
4	42829	PLATE, CENTER SKID	1	
5	42827	PLATE, FRONT SKID	1	

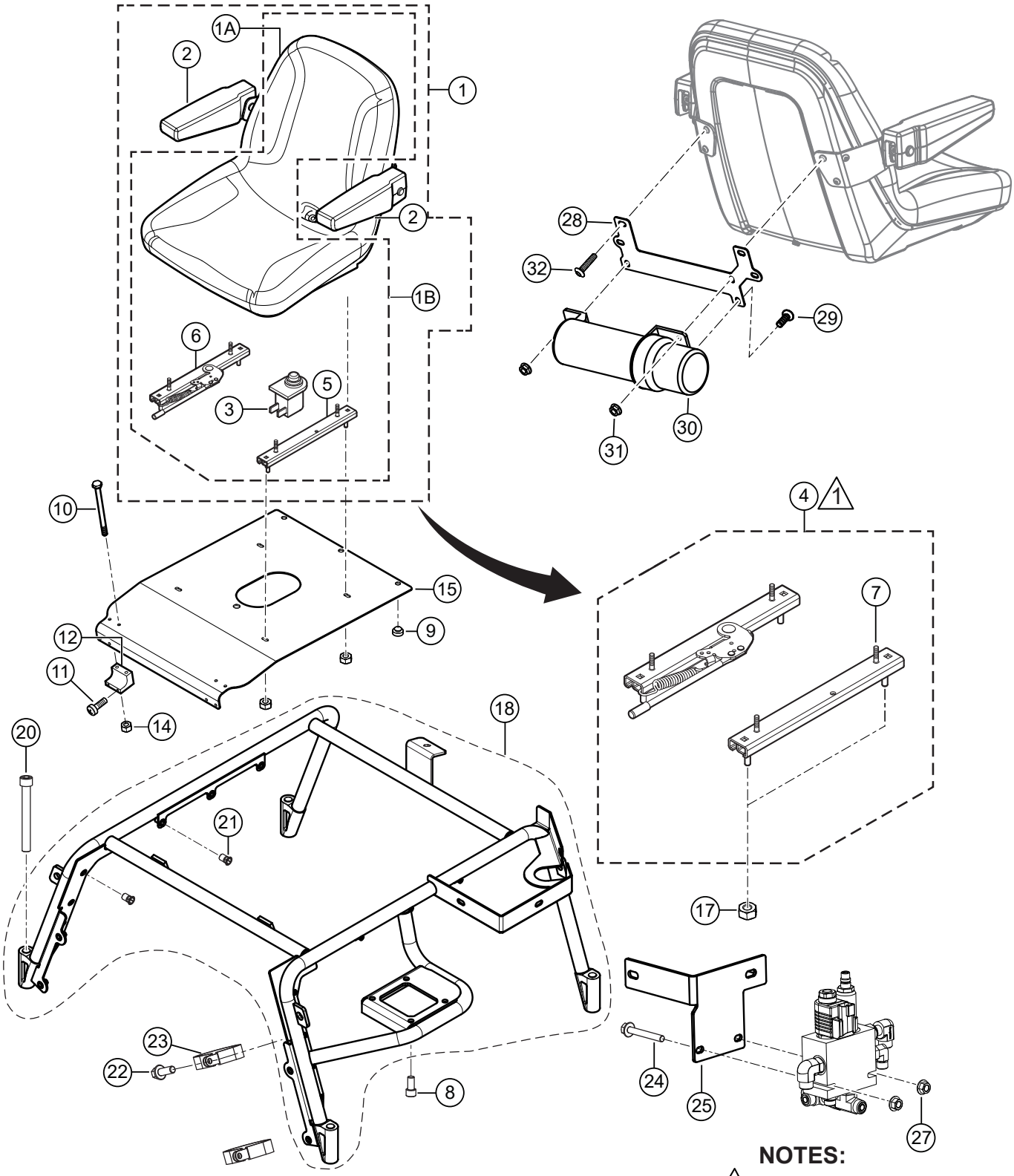

NOTES:

1 MICHIGAN SEAT ONLY.

NO.	PART NO.	PART NAME	QTY.	REMARKS
1	21852-S	SEAT, ADJUSTABLE W/ARMS, MICHIGAN	1	INCLUDES ITEMS W/$ NO LONGER AVAILABLE
1	32960-SK	SEAT, ADJUSTABLE W/ARMS, SEARS	1	INCLUDES ITEMS W/%
1A$	21860	SEAT, BASIC	1	NO LONGER AVAILABLE
1B%	32963-SK	SEAT, ADJUSTABLE W/O ARMS, SEARS	1	INCLUDES ITEMS W/+
2$	21868	ARM REST KIT, MICHIGAN	1	
2%	34792	ARM REST KIT, SEARS	1	
3$	21870	KILL SWITCH, SEAT	1	REPLACES P/N 32980
3%+	32962	KILL SWITCH, SEAT, SEARS	1	
4$	21865	SEAT ADJUSTER KIT	1	INCLUDES ITEMS W/#
5%+	32964	SEAT ADJUSTER LH, SEARS	1	
6%+	32965	SEAT ADJUSTER RH, SEARS	1	
7#	0400 B	SCREW, HHC 5/16"-8 X 1/2"	4	
8	17118	SCREW, SHC, 3/8"-16 X 3/4"	4	
9	21597	BUMPER, STEM 1.0" DIA. X .5S X .31	3	
10	25307	SCREW, HHC M6-1.0 X 50 MM	4	
11	12287	SCREW, THP 1/4"-20 X 3/4" SS	4	
12	20685	BLOCK, OPERATOR SEAT PIVOT	2	
14	42352	NUT, HEX, SERRATED-FLANGE, M6-1.0	4	
15	42069	PLATE, SEAT	1	
17	49071	NUT, FLANGED, 5/16"-18	4	
18	45572	SEAT FRAME	1	INCLUDES ITEMS W/@
20	32606	SCREW, HHC M14, 2.0 X 90 MM	4	
21@	42496	RIVNUT, LARGE FLANGE, M6 X 1.0	19	
22	42542	SCREW HFS, ZP, M6-1.0 X 16	2	
23	21544	CLAMP, 2-3/16" ID.	2	
24	42005	SCREW, HHF M8-1.25 X 60 MM ZINC	2	
25	42775	MOUNT, STEERING VALVE	1	
27	23802	NUT, HEX, SERRATED-FLANGE M8-1.25	2	
28	42541	BRACKET, DOCUMENT HOLDER	1	
29	29712	BOLT, CARRIAGE, 1/4"-20 X 3/4"	3	
30	23297	MANUAL HOLDER, PICTOGRAPH	1	
31	49070	NUT, FLANGED, 1/4"-20	3	
32	21869	SCREW, CAP 5/16"-18 X 5/8"	6	

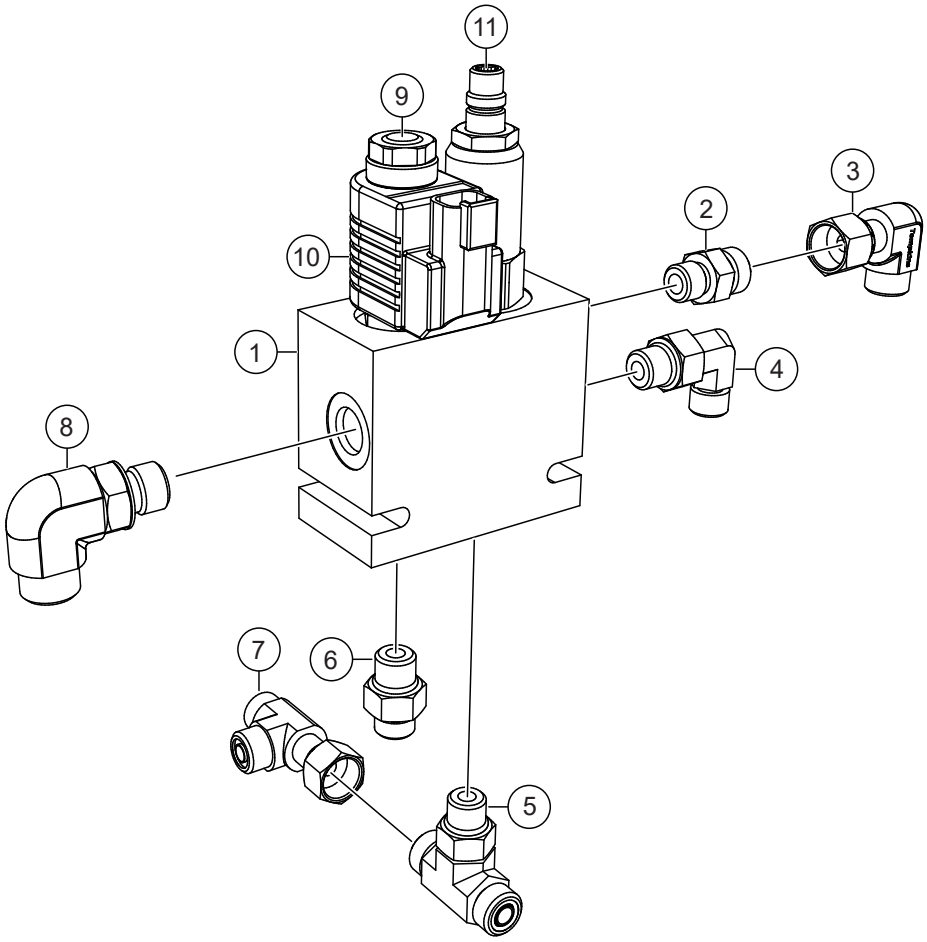
11
9
3
2
10
1
4
8
7
6
5

STEERING/PUMP STROKER ASSY.

NO.	PART NO.	PART NAME	QTY.	REMARKS
1	32282	VALVE ASSY., STEERING/PUMP STROKER	1	
2	32256	FITTING, 90° 6FORFS X 6MORFS	1	
3	32341	FITTING, STRAIGHT -6MORFS X -6MOR	1	
4	32733	FITTING, 90° 4MORFS X 6MOR	1	
5	42942	FITTING, TEE 6MORFS X 6MOR	1	
6	32730	FITTING, STRAIGHT 6MO X 4MORFS	1	
7	32426	FITTING, TEE 6MORFS X 6FORFS	1	
8	32354	FITTING, 90° -6MORFS X -6MOR	1	
9	22835	VALVE, PROPORTIONAL	1	
10	22283	COIL, STROKER VALVE	1	
11	22831	VALVE, PRESSURE REDUCING	1	

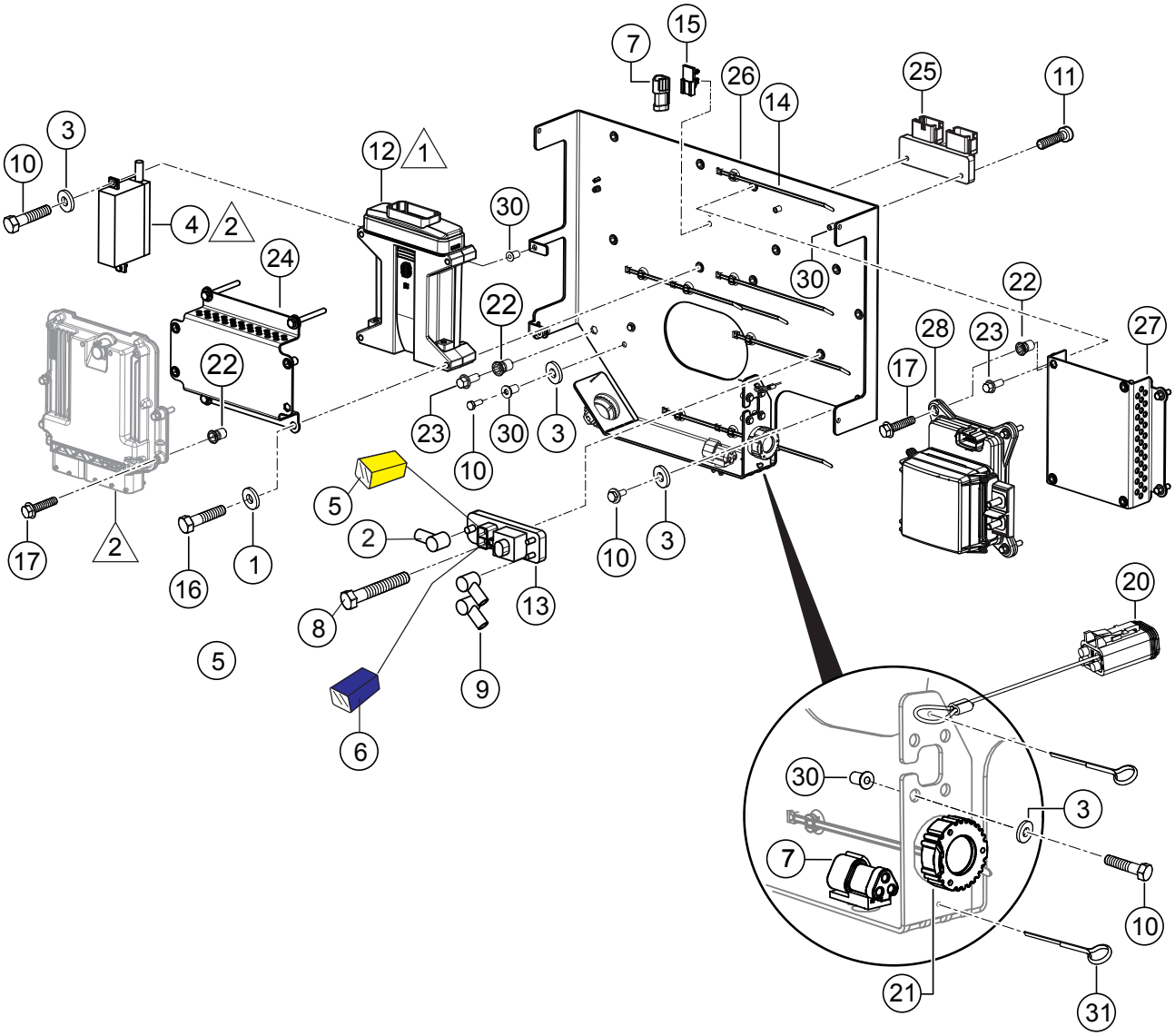

NOTE:

1 CONNECTS TO MAIN HARNESS.

2 ECU AND FUSE BOX INCLUDED WITH ENGINE.

ELECTRICAL CONTROL PANEL ASSY.

NO.	PART NO.	PART NAME	QTY.	REMARKS
1	0948	WASHER, FLAT SAE 1/4"	4	
2	42981	BOOT, TERMINAL, 8-2GA., RED	1	
3	15173	WASHER, FLAT, #8	9	
4	42602-50	FUSE BOX, HATZ	1	
5	22725-600	FUSE, 60 AMP J CASE	1	
6	22725-200	FUSE, 20 AMP J CASE	1	
7	22815	RECEPTACLE, RES. 120 OHM	2	
8	25307	SCREW, HHC M6-1.0 X 50 MM	1	
9	2762	BOOT, TERMINAL	2	
10	28922-083	SCREW, HHC M4-0.7 X 12 MM	9	
11	35299	SCREW, PHP M4-0.7 X 25 MM	2	
12	42072	CONTROLLER, MC 050-120	1	
13	42140	MODULE, POWER RELAY	1	
14	42315	TIE, CABLE ASSY., FIR TREE MOUNT AND CABLE	7	
15	42328	CLIP, MOUNTING	3	
16	42339	SCREW, HHC, ZP, M6-1.0 X 60	4	
17	42347	SCREW, HFS, ZP, M6-1.0 X 30	8	
20	42440	LANYARD, 4-WAY PLUG, DT SERIES	1	
21	42442	CON. CAP, DEUTSCH, HD10, 9 PIN W\LANYARD	2	
22	42496	RIVNUT FASTENER, HALF HEX LONG FLANGE M6 X 1	20	
23	12464	SCREW, HHC M6-1.0 X 16 MM	5	
24	42704	BRACKET, HATZ ENGINE ECU MOUNT	1	
25	42713	BUSS BAR, DEUTSCH STYLE, 24 PIN	1	
26	42890	PANEL, ELECTRICAL	1	
27	42891	BRACKET, FUSE PANEL MOUNT	1	
28	42893	FUSE BOX	1	
30	49163	NUT, BLIND M4-1.0 X .020-.08 GRIP	11	
31	5117	PIN, COTTER 1/16" X 1/2"	2	

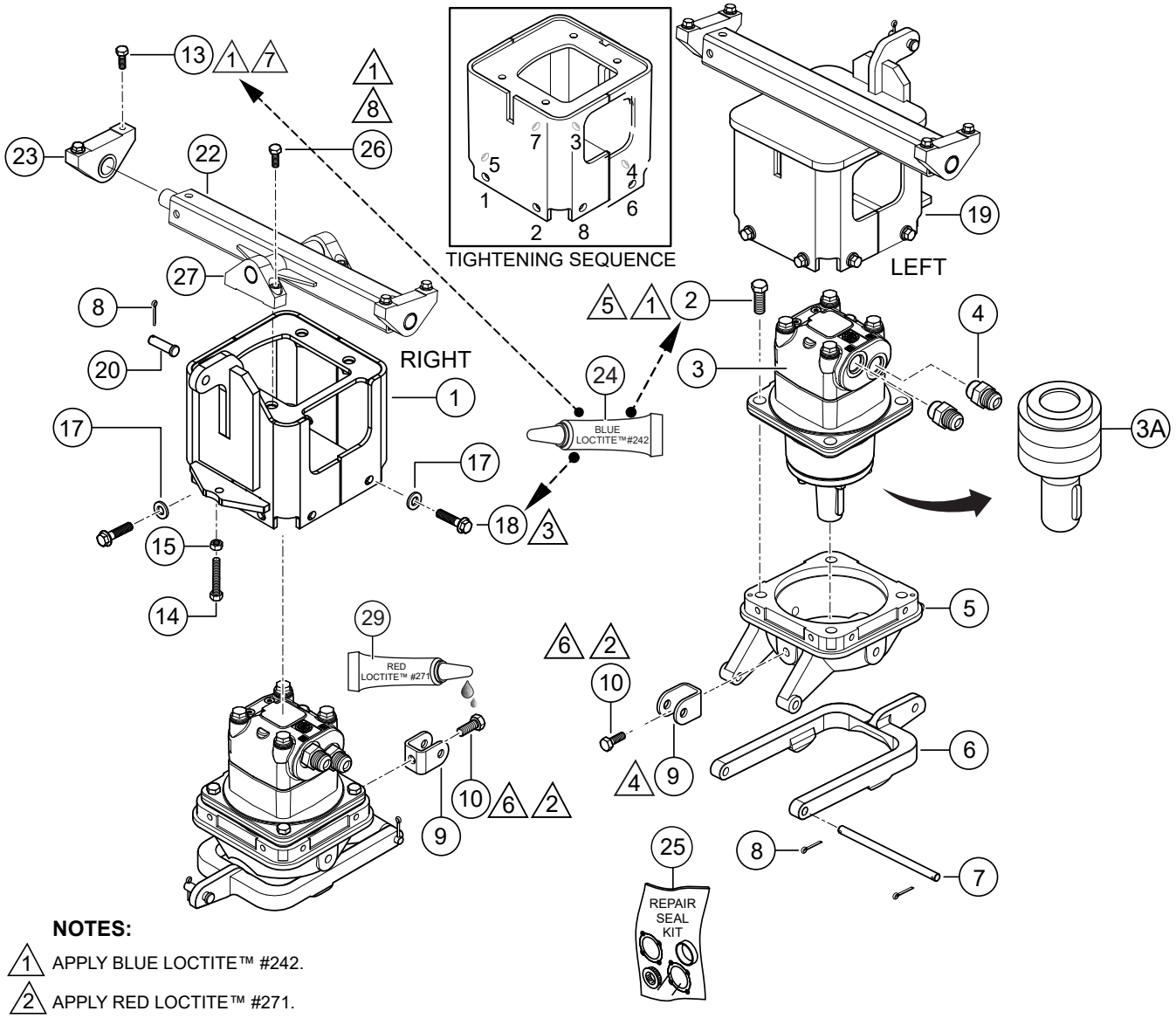

NOTES:

1. APPLY BLUE LOCTITE™ #242.
2. APPLY RED LOCTITE™ #271.
3. APPLY MINIMAL AMOUNT OF LPS ANTI-SEIZE GREASE TO THREADS OF SCREW (ITEMS 18). HAND START SCREWS. FOLLOWING TIGHTENING SEQUENCE (SEE DIAGRAM ABOVE). TORQUE SCREW ASSEMBLY (FIRST PASS) TO A VALUE OF 21 FT-LB (28.47 N•m). FOLLOW SAME SEQUENCE FOR FINAL TORQUE OF 41 FT-LB (55.59 N•m).
4. CLEAN WITH NON-PETROLEUM BASE CLEANER BEFORE INSTALLING ITEMS 9 AND 10.
5. TORQUE BOLTS TO 125 FT-LB (169.48 N•m)
6. TORQUE BOLTS TO 57 FT-LB (77.28 N•m)
7. TORQUE BOLTS TO 23 FT-LB (31.18 N•m)
8. TORQUE BOLTS TO 76 FT-LB (103.04 N•m)

NO.	PART NO.	PART NAME	QTY.	REMARKS
1	42392	HOUSING, HYD. MOTOR, RIGHT SIDE	1	
2	21376	SCREW, HHC 5/8"-11 X 1-1/2"	8	
3A$	11009878	SHAFT/BEARING HYD. MOTOR DANFOSS	2	
3	42963	MOTOR, HYD. SAUER-DANFOSS	2	INCLUDES ITEMS W/$
4	32357	FITTING, STR 10MORFS X 12MOR	4	
5	20643	HOUSING, LOWER MOTOR HOUSING	2	
6	22738	YOKE, PITCH-MACHINED	2	
7	21022	PIN, YOKE PIVOT	2	
8	0183	PIN, COTTER 1/8" X 1-1/4"	8	
9	20787	CLEVIS, STEERING CYLINDER	3	
10	2691	SCREW, SCREW, HHC 1/2"-13 X 1"	3	
13	22106	SCREW, HHFS 3/8"-16 X 1-1/4" ZN	8	
14	25002	SCREW, HHC 1/2"-13 X 3-1/2" TAP	2	
15	968011	NUT, HEX FINISH 1/2"-13	2	
17	21707	WASHER, FLAT 3/8"	16	
18	22228	SCREW, HHF 3/8"-16 X 1.00" GRD 8	16	
19	42391	HOUSING, HYD. MOTOR, SINGLE DOF	1	
20	22409	PIN, CLEVIS .50 X 1.50" STEEL ZINC PLTD.	4	
22	42528	TRUNNION, SQ. DOUBLE DOF	1	
23	11555	PIVOT BLOCK ASSY., MOTOR MT. W/BUSH	4	
24	1477	LOCTITE™ #242, BLUE, 0.5 CC BOTTLE	1	
25	32113	SEAL KIT COMPLETE	1	
26	17333	SCREW, SHC, M12 - 1.75 X 45" SS	4	
27	42280	BLOCK, MOTOR PIVOT, ASSEMBLY	2	
29	19379-014	LOCTITE™ RED #271	1	

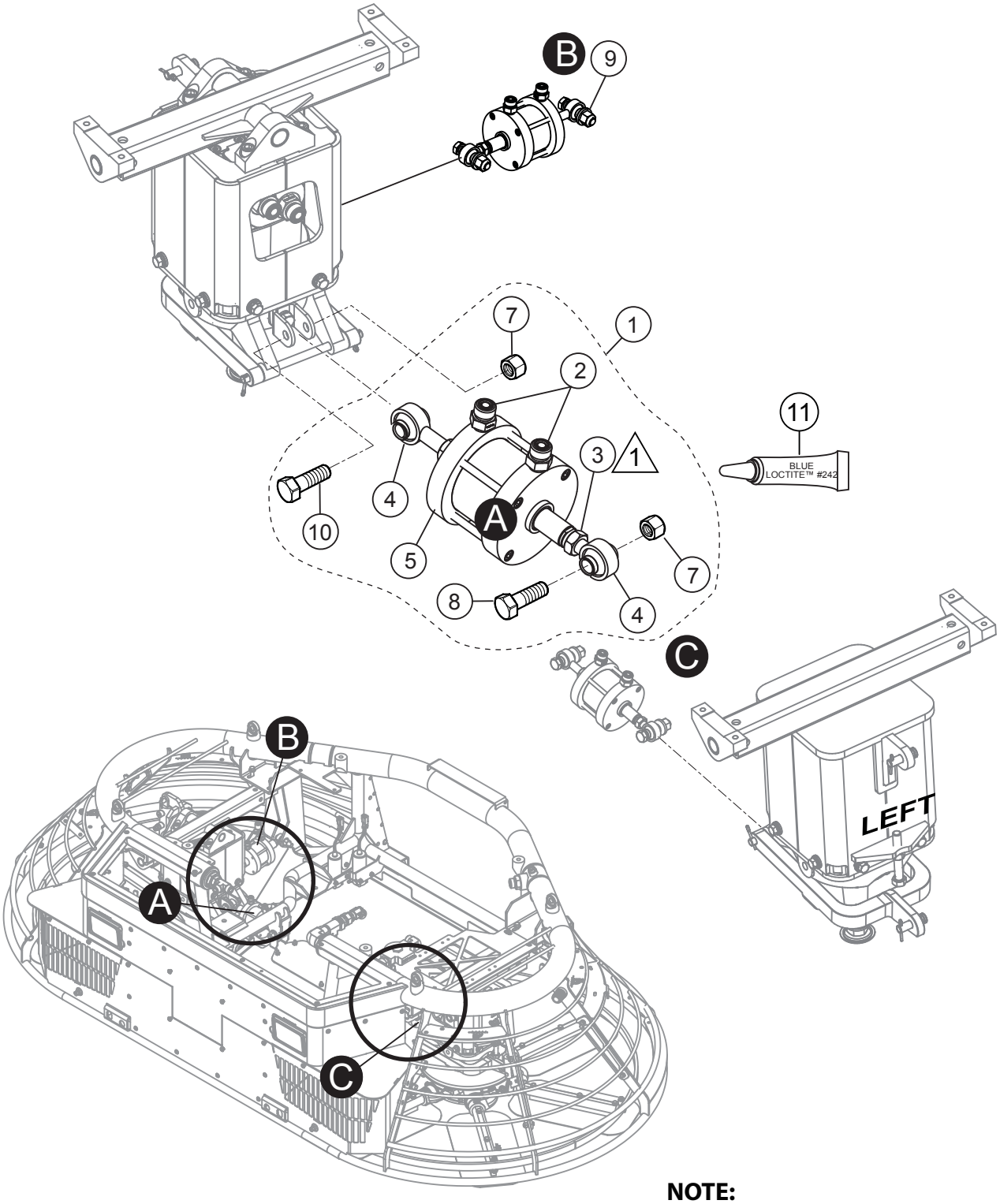

NOTE:

1 APPLY BLUE LOCTITE™ #242.

NO.	PART NO.	PART NAME	QTY.	REMARKS
1	42226	CYLINDER HYD. STEERING	2	INCLUDES ITEMS W/#
2#$	32350	FITTING, STRAIGHT -6MORFS X 1/4 MP	6	
3#$	11146	NUT, HEX JAM 1/2"-20 PLATED	6	
4#$	21944	ROD END, 1/2"-20 M RH W/CUSTOM BALL	6	
5#$	12056	CYL. 2.5" BORE X 1.5" STROKE X .75 ROD	3	
7#	10176	NUT, NYLOC 1/2"-13	4	
8#	13178	SCREW, HHC 1/2"-13 X 2-1/4"	2	
9	42317	CYLINDER, HYD. STEERING	1	INCLUDES ITEMS W/$
10#$	12318	SCREW, HHC 1/2"-13 X 2-3/4"	2	
11	1477	LOCTITE™ #242, BLUE, 0.5 CC BOTTLE	1	

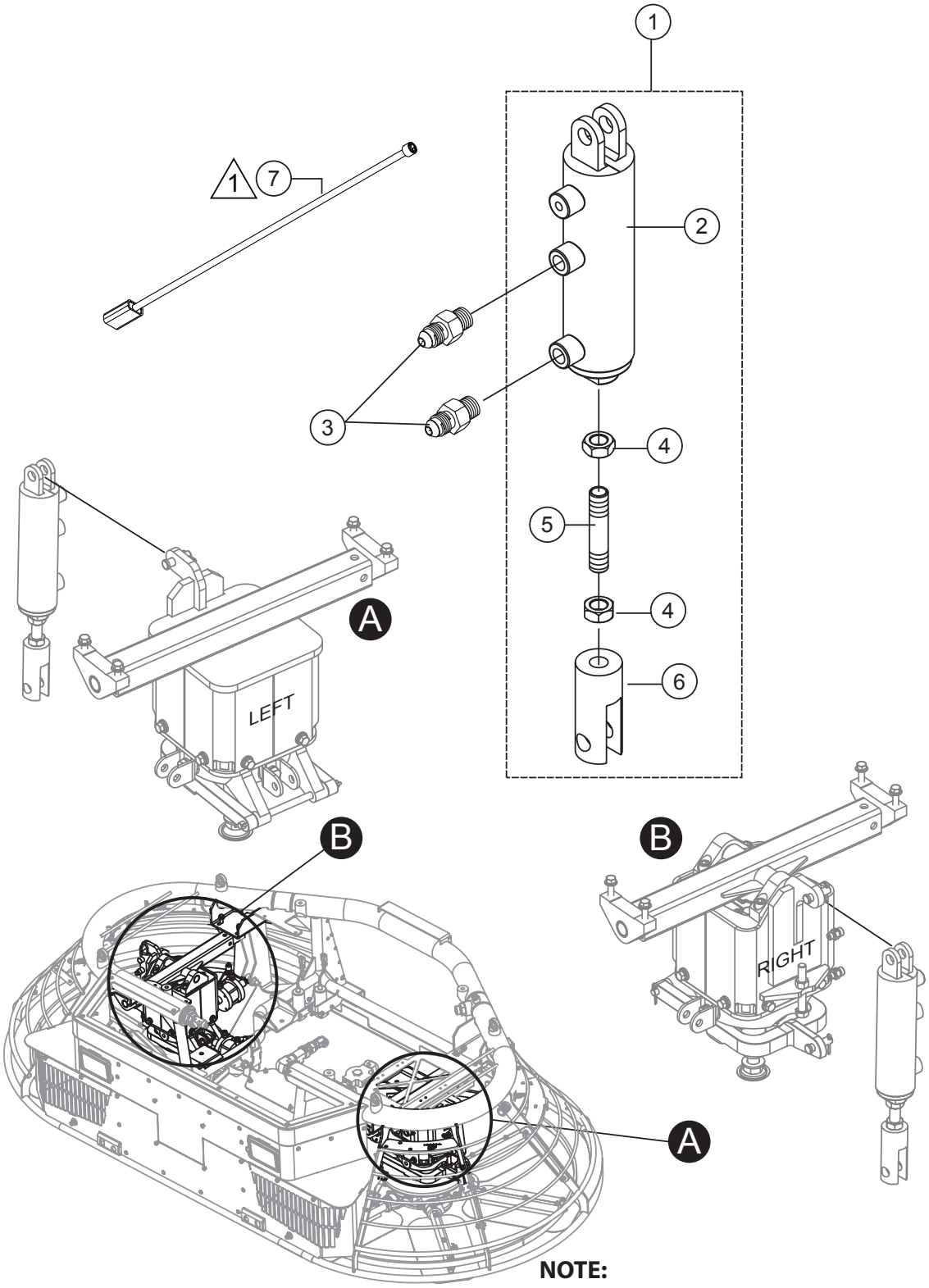

NOTE:

1 CONNECTS TO WIRING HARNESS.
INCLUDED IN ITEM 1 P/N 32706-SK.

HYDRAULIC CYLINDER ASSY.

NO.	PART NO.	PART NAME	QTY.	REMARKS
1	32706-SK	KIT, HYDRAULIC PITCH CYLINDER	2	INCLUDES ITEMS W/#
2#	32673	CYLINDER, POSITION PITCH	2	
3	32340	FITTING, STRAIGHT -4MORFS X -4MOR	4	
4#	11146	NUT, HEX JAM 1/2"-20 PLATED	4	
5#	22279	SCREW, SH 1/2"-20 X 2.50"	2	
6#	23956	CLEVIS, SERVICE	1	
7#	42035	WIRE ASSEMBLY	1	

HYDRAULIC HEAT EXCHANGER ASSY. (R-L)

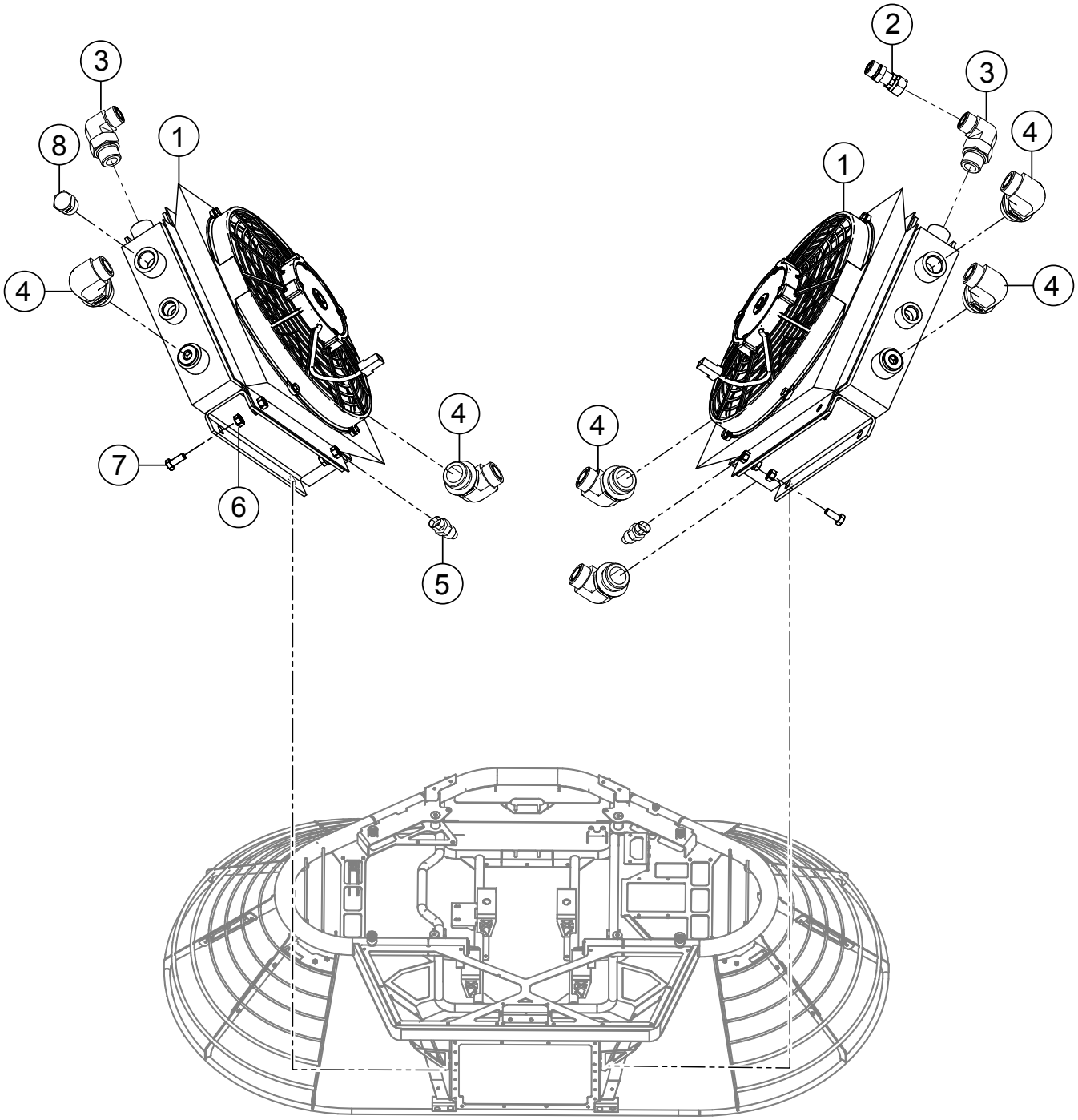

HYDRAULIC HEAT EXCHANGER ASSY. (R-L)

NO.	PART NO.	PART NAME	QTY.	REMARKS
1	42648	HEAT EXCHANGER, HYDRAULIC	2	
2	32721	FITTING, ORIFICE 8FORFS X 8MORFS X .094"	1	
3	32718	FITTING, 90° 8MORFS X 8MOR	2	
4	32358	FITTING, 90° -10MORFS X -10MOR	6	
5	22746	SENSOR, TEMPERATURE, HYDRAULIC OIL	2	
6	23802	NUT, HEX FLANGE M8-1.25 SERRATED	14	
7	42343	SCREW, HFS, ZP, M8-1.25 X 20	10	
8	32468	FITTING, PLUG O-RING	1	

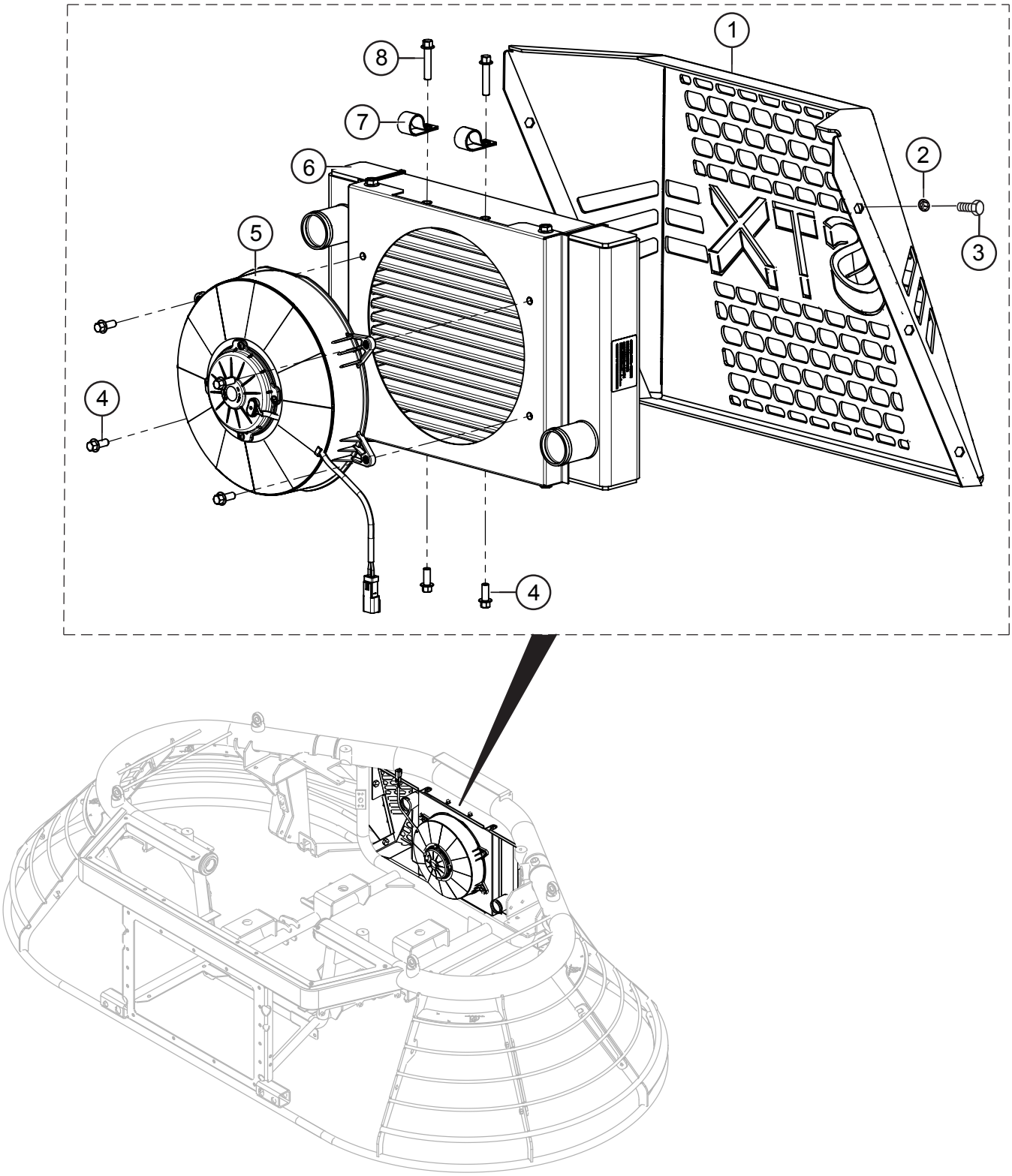
1
2
3
4
4
5
6
7
8

CHARGE AIR COOLER ASSY.

NO.	PART NO.	PART NAME	QTY.	REMARKS
1	42701	PANEL, CHARGE AIR COOLER COVER	1	
2	42496	RIVNUT FASTENER, HALF HEX LONG FLANGE M6 X 1	14	
3	42347	SCREW, HFS M6-1.0 X 30 ZP	14	
4	42343	SCREW, HFS M8-1.25 X 20 ZP	6	
5	42954	FAN, 10" PUSHER, AXIAL MOTOR	1	
6	42559	COOLER, CHARGE AIR	1	
7	32083	CLAMP, LOOP-VINYL 1.0" DIA.	2	
8	42346	SCREW, HFS M8-1.25 X 40 ZP	2	

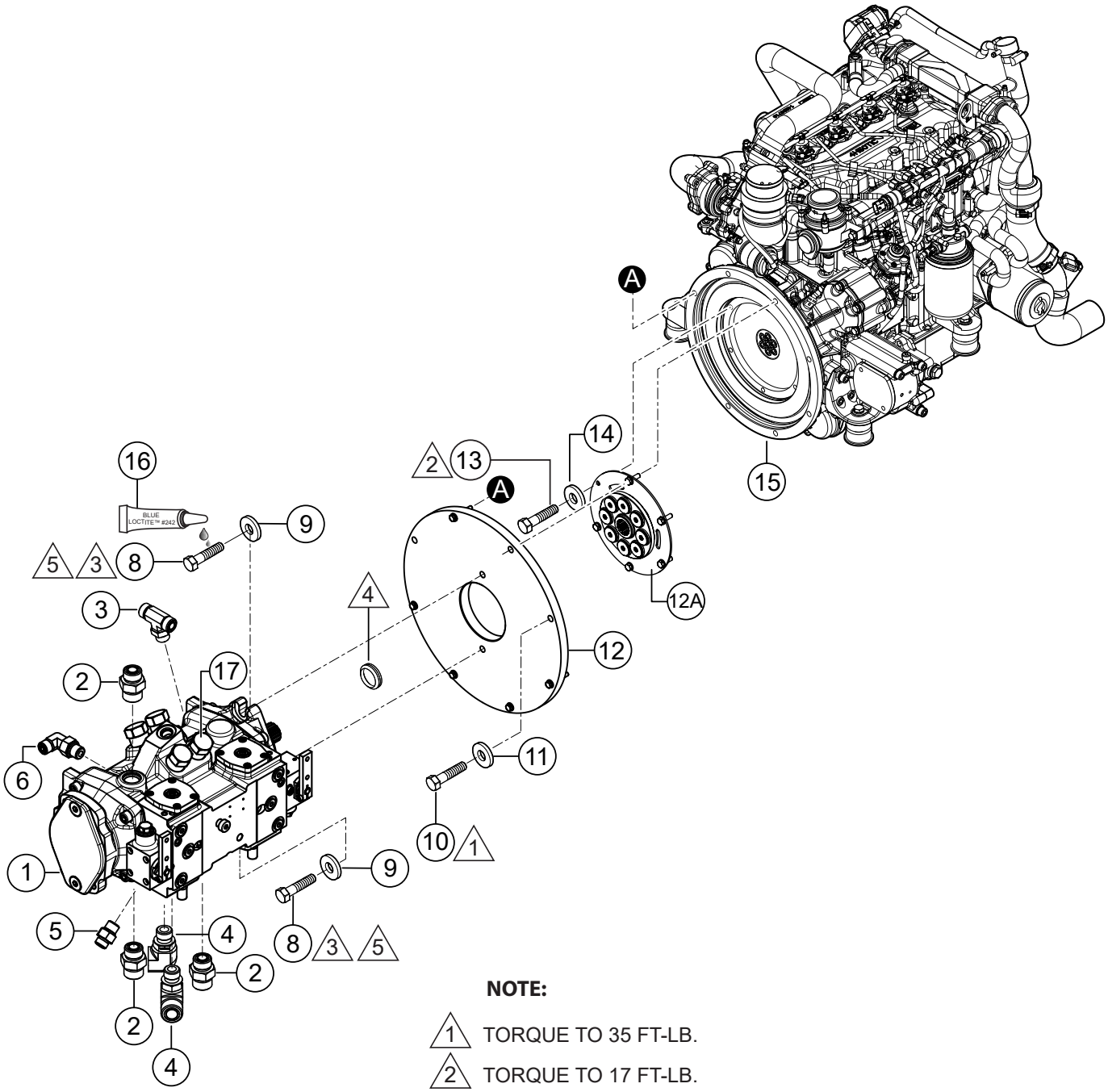

NOTE:

1. TORQUE TO 35 FT-LB.
2. TORQUE TO 17 FT-LB.
3. TORQUE TO 57 FT-LB. SET TORQUE WRENCH TO 47 FT-LB. WHEN USING 3 IN. LONG EXTENSION AND A 14 IN. LONG TORQUE WRENCH (MEASURE BETWEEN SQUARE DRIVE AND CENTER OF HANDLE).
4. APPLY SEAL AND GREASE SUPPLIED WITH ADAPTER TO SHAFT OF PUMP.
5. APPLY BLUE LOCTITE™ #242.

PUMP FITTINGS ASSY.

NO.	PART NO.	PART NAME	QTY.	REMARKS
1	42611	PUMP ASSY., 45 CC, MECHANICAL, PISTON	1	
2	32357	FITTING, STRAIGHT -10MORFS X -12MOR	3	
3	32713	FITTING, BRANCH TEE 8MORFS X 8MOR	1	
4	32363	FITTING, 90° 12MOR X 10MORFS	2	
5	32730	FITTING, STRAIGHT 6MO X 4MORFS	1	
6	32733	FITTING, 90° 4MORFS X 6MOR	1	
8	5218	SCREW, HHC, 1/2"-13 X 1-1/2"	2	
9	16630	WASHER, FLAT, SAE 1/2"	2	
10	21854	SCREW, HHC, M10-1.5 X .312	8	
11	940358	WASHER, FLAT, 10 MM ID. X 20 MM OD.	8	
12	42628	ADAPTER, 14T SAE 5 PUMP	1	
12A	42628-1	COUPLER, PUMP	1	
13	1605	SCREW, HHC, M8-1.25 X 25 MM	6	
14	25591	WASHER, M8	6	
15	42602	ENGINE, HATZ	1	
16	1477	LOCTITE™ #242 BLUE, 0.5 CC BOTTLE	1	
17	42611-1	VALVE, PRES. RELIEF, 300 BAR, HTX6H-STX6H	2	

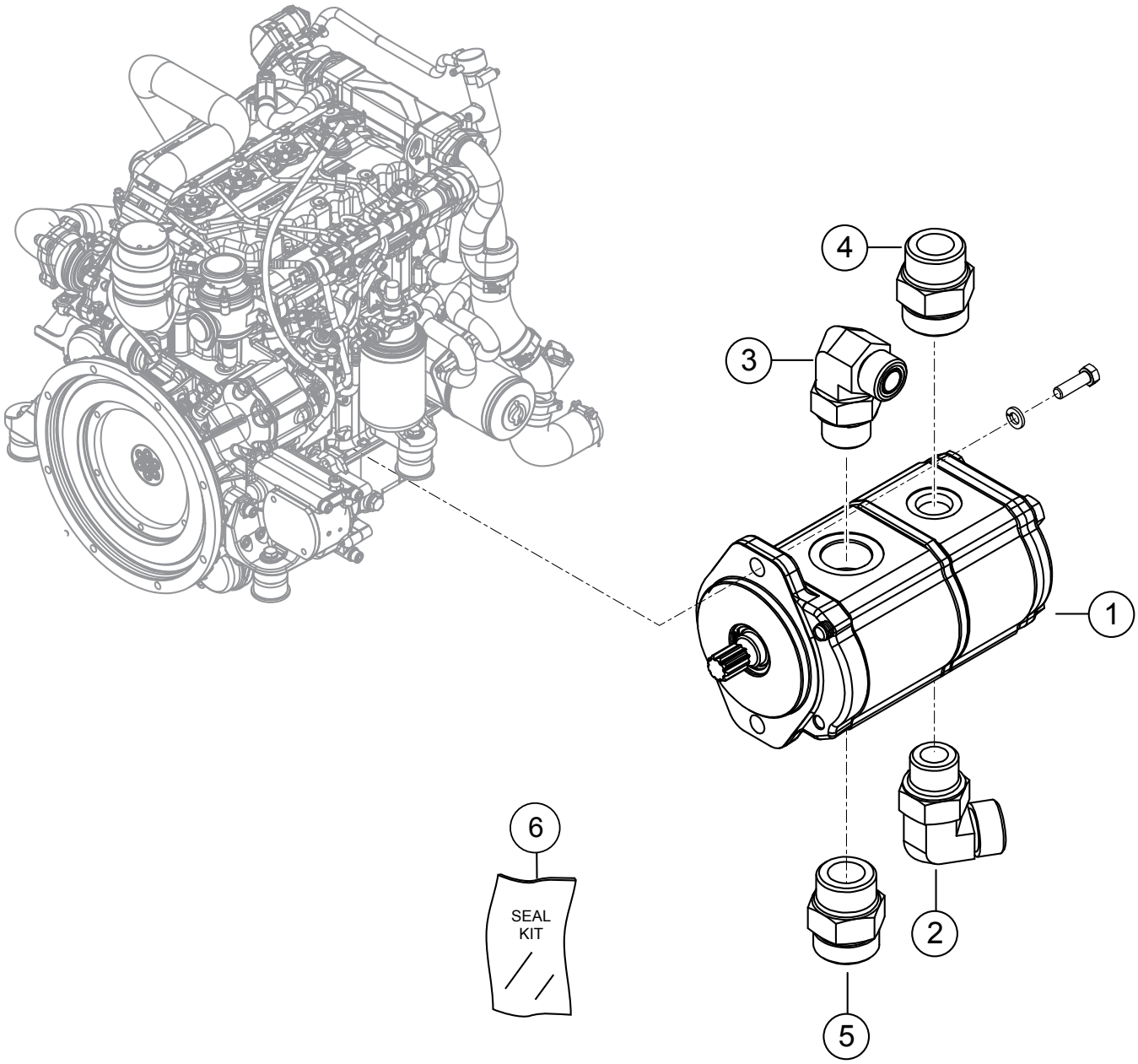
4
3
1
6
SEAL
KIT
2
5

FIXED PUMP FITTINGS ASSY.

NO.	PART NO.	PART NAME	QTY.	REMARKS
1	42612	PUMP, FIXED 19 CC/8 CC GEAR CHARGE	1	
2	32362	FITTING, 90° 12MOR X 12MORFS	1	
3	32712	FITTING, 90° 8MORFS X 12MOR	1	
4	32629	FITTING, STRAIGHT 6MORFS X 10MOR	1	
5	32742	FITTING, STRAIGHT 16MORFS X 16MOR	1	
6	42612-01	KIT, SEAL	1	

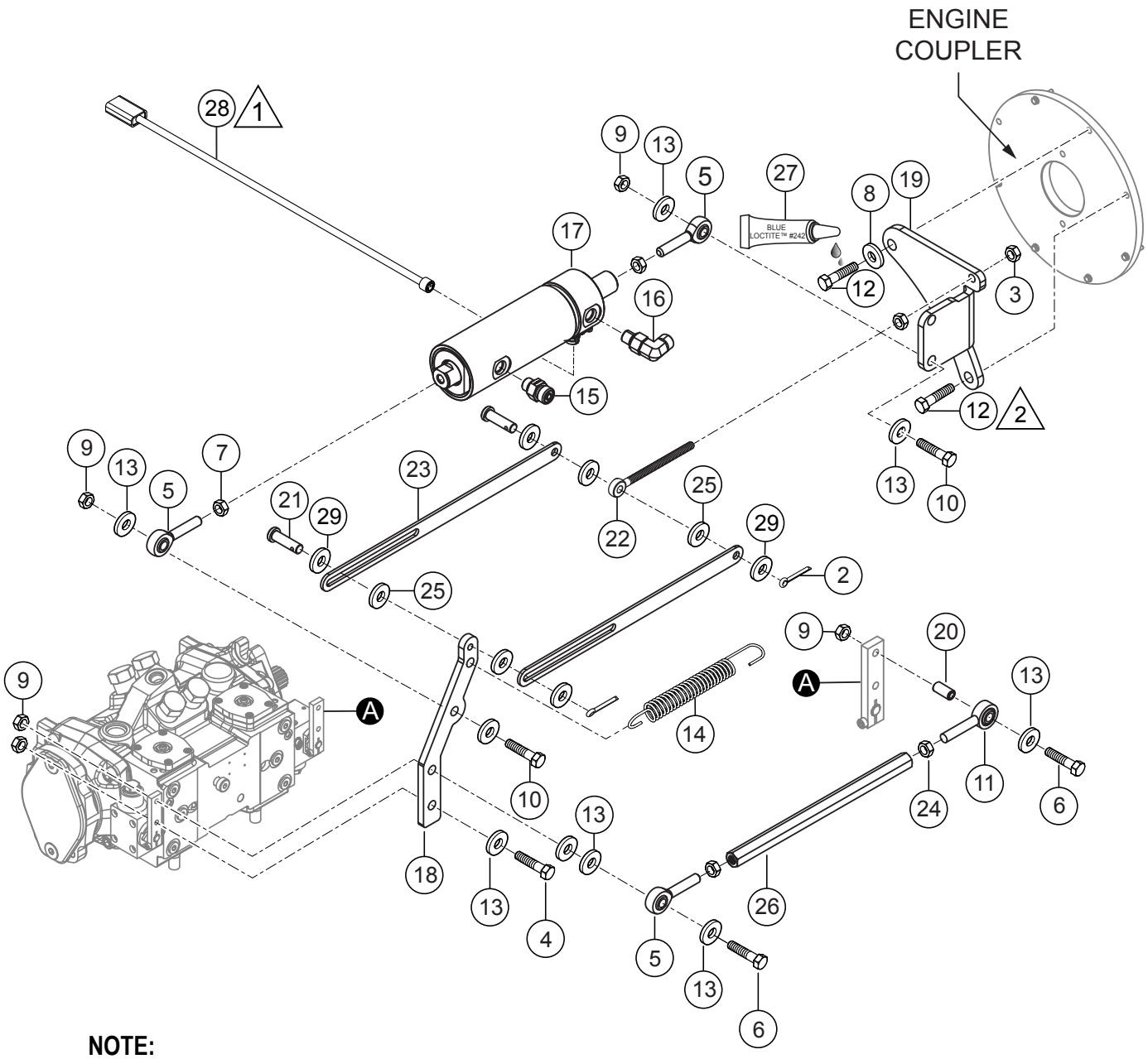

NOTE:

1. WIRING HARNESS INCLUDED WITH ITEM 17 P/N 32674.
2. APPLY BLUE LOCTITE™ #242.

NO.	PART NO.	PART NAME	QTY.	REMARKS
1	0181 B	WASHER, LOCK 1/4" MED.	1	
2	0683	PIN, COTTER 3/32" DIA. X 3/4"	2	
3	10024	NUT, NYLOC 1/4"-20	2	
4	1605	SCREW, HHC M8-1.25 X 25 MM	1	
5	1723	ROD END, 5/16"-24 MALE RH	3	
6	1928	SCREW, HHC M8-1.25 X 40 MM	2	
7	6014 C	NUT, HEX FINISH 5/16"-24	3	
8	17110	WASHER, FLAT 10 MM ZN	6	
9	20440	NUT, HEX LOCK M8-1.25 THIN	5	
10	20983	SCREW, HHC M8-1.25 X 30 MM	2	
11	21262	ROD END 5/16"-24 X .312 MALE LH-HD	1	
12	21584	SCREW, HHC M10-1.5 X 35 MM GRD 10.9	2	
13	25591	WASHER, M8	9	
14	22716	SPRING, EXT .75" OD X 4.5" X .062"	1	
15	32340	FITTING, STRAIGHT -4MORFS X -4MOR	1	
16	32347	FITTING, 90° 4MORFS X 4MOR	1	
17	32674	CYLINDER, PUMP STROKING.....	1	.....INCLUDES ITEMS W/#
18	42620	ARM, SWASH PLATE	1	
19	42622	BOLT PLATE, CYLINDER	1	
20	34810	SPACER, .32 ID. X .41 OD. X .44L	1	
21	42835	PIN, STROKE STOP CLEVIS	2	
22	42836	RODEND, STROKE STOP	1	
23	42837	STRAP, STROKE STOP	2	
24	8131	NUT, FINISH, LH, 5/16"-24	1	
25	42840	WASHER, NYLON, 1/4" X 0.5 OD.	4	
26	42895	ROD, STROKE LEVER CONNECTION	1	
27	1477	LOCTITE™ #242, BLUE, 0.5 CC BOTTLE	1	
28#	42035	WIRE ASSEMBLY	1	
29	0948	WASHER, FLAT SAE 1/4"	4	

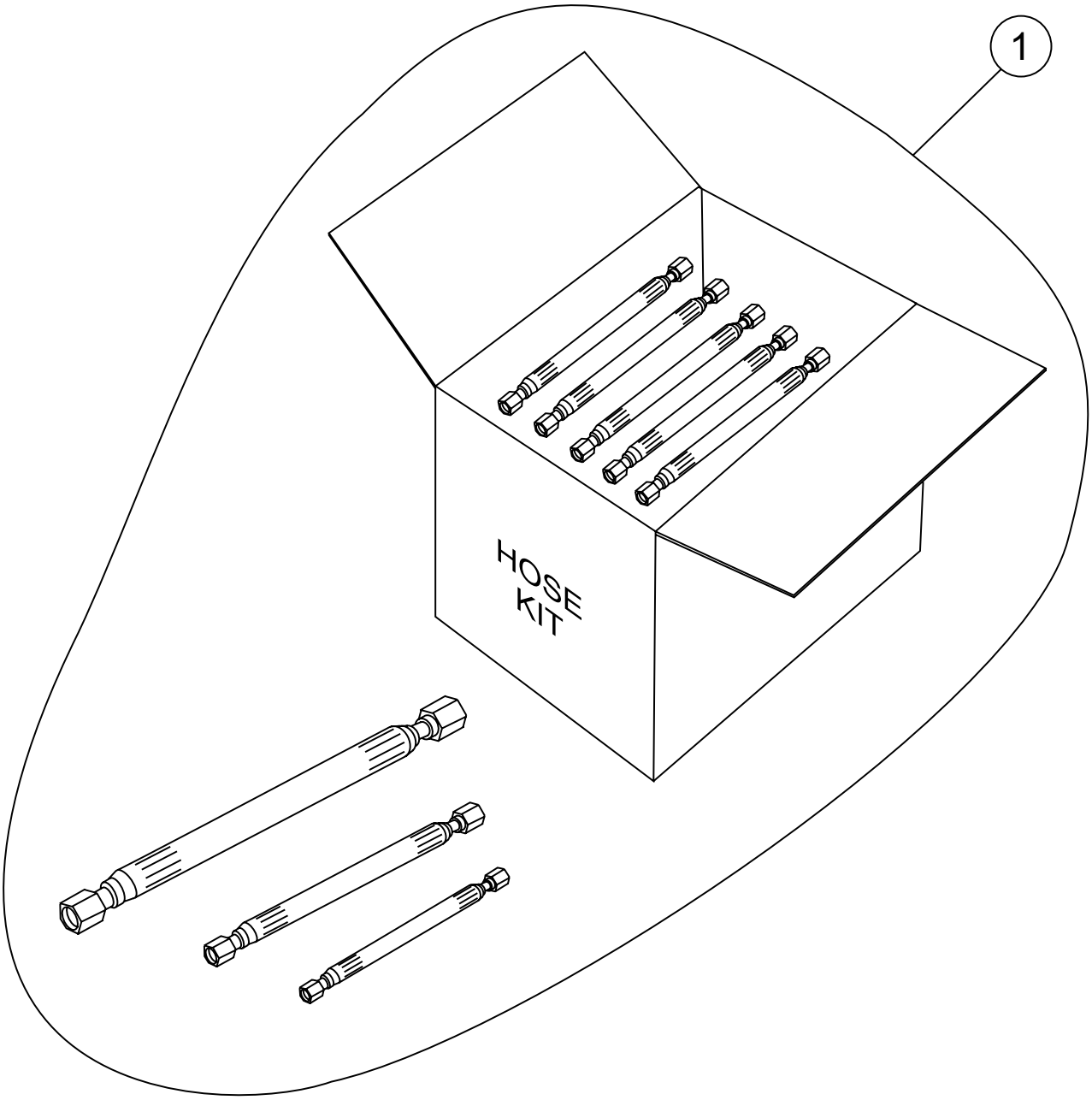
1
HOSE
KIT

NO.	PART NO.	PART NAME	QTY.	REMARKS
1	42765	HOSE KIT ASSY.	1	INCLUDES ITEMS BELOW
	43001	HOSE ASSY., 5/8" X 33.75 10FFORX X 10FFORX 90S 5K	1	H1
	43002	HOSE ASSY., 5/8" X 33.75 10FFORX X 10FFORX 90S	1	H2
	43003	HOSE ASSY., 5/8" X 22.5 10FFORX 90S X 10FFORX	1	H3
	43004	HOSE ASSY., 5/8" X 64.75 10FFORX 90S X 10FFORX	1	H4
	43005	HOSE ASSY., 5/8" X 24.0 10FFORX 90S X 10FFORX	1	H5
	43006	HOSE ASSY., 5/8" X 29.5 10FFORX 90S X 10FFORX	1	H6
	43007	HOSE ASSY., 1/2" X 46.5 8FFORX X 8FFORX	1	H7
	43008	HOSE ASSY., 5/8" X 27.25 10FFORX 90S X 10FFORX	1	H8
	43009	HOSE ASSY., 3/4" X 21.0 10FFORX X 16FFORX 90S	1	H9
	43010	HOSE ASSY., 1" X 47.0 16FFORX X 16FFORX 90S	1	H10
	43011	HOSE ASSY., 3/4" X 21.5 12FFORX X 12FFORX	1	H11
	43012	HOSE ASSY., 1/2" X 28.5 8FFORX X 8FFORX 45S	1	H12
	43013	HOSE ASSY., 1/2" X 40.0 8FFORX 90S X 8FFORX	1	H13
	43014	HOSE ASSY., 3/8" X 56.0 6FFORX 90S X 6FFORX	1	H14
	43015	HOSE ASSY., 3/8" X 56.0 6FFORX 90S X 6FFORX	1	H15
	43016	HOSE ASSY., 1/2" X 33.5 8FFORX 45S X 8FFORX	1	H16
	43044	HOSE ASSY., 1/2" X 41 8FFORX 45S X 8FFORX	1	H17
	43018	HOSE ASSY., 1/4" X 68.25 4FFORX 90S X 4FFORX 5K	1	H18
	42861	HOSE ASSY., 3/8" X 13.5 6FFORX X 6FFORX	1	H19
	42862	HOSE ASSY., 1/4" X 46.38 4FFORX X 4FFORX 90S	1	H20
	42863	HOSE ASSY., 1/4" X 33.75 4FFORX X 4FFORX 45S	1	H21
	42864	HOSE ASSY., 3/8" X 105.5 6FFORX 90S X 6FFORX	1	H22
	42865	HOSE ASSY., 3/8" X 67 6FFORX X 6FFORX	1	H23
	42866	HOSE ASSY., 3/8" X 97.75 6FFORX 90S X 6FFORX	1	H24
	42867	HOSE ASSY., 3/8" X 58.5 6FFORX X 6FFORX	1	H25
	42868	HOSE ASSY., 3/8" X 58 6FFORX 90S X 6FFORX	1	H26
	42869	HOSE ASSY., 3/8" X 58.75 6FFORX X 6FFORX	1	H27
	42870	HOSE ASSY., 3/8" X 47.75 6FFORX X 6FFORX	1	H28
	42871	HOSE ASSY., 3/8" X 48 6FFORX X 6FFORX	1	H29
	42872	HOSE ASSY., 3/8" X 53.5 6FFORX X 6FFORX	1	H30
	42873	HOSE ASSY., 3/8" X 52.5 6FFORX X 6FFORX	1	H31
	43032	HOSE ASSY., 1/4" X 54.5 4FFORX X 4FFORX	1	H32
	43042	HOSE ASSY., 1/4" X 54.5 4FFORX 90S X 4FFORX	1	H33
	43033	HOSE ASSY., 1/4" X 89.75 4FFORX 90S X 4FFORX	1	H34
	43033	HOSE ASSY., 1/4" X 89.75 4FFORX 90S X 4FFORX	1	H35
	42878	HOSE ASSY., 3/8" X 17.75 6FFORX 90S X 6FFORX	1	H36
	43037	HOSE ASSY., 3/4" X 27.0 12FFORX X 12FFORX 90S	1	H37
	43038	HOSE ASSY., 1/4" X 32.5 6FFORX 90S X 4FFORX	1	H38
	43039	HOSE ASSY., 1/4" X 26 4FFORX X 4FFORX 5K	1	H39
	43040	HOSE ASSY., 1/4" X 74 4FFORX X 4FFORX 5K	1	H40
	43041	HOSE ASSY., 1/4" X 20 4FFORX X 4FFORX	1	H41
	43041	HOSE ASSY., 1/4" X 20 4FFORX X 4FFORX	1	H42
	43043	HOSE ASSY., 1/4" X 22.5 4FFORX X 4FFORX	1	H43

HYD. HOSE ASSY. (P. BLOCK PORTS C1~C4)

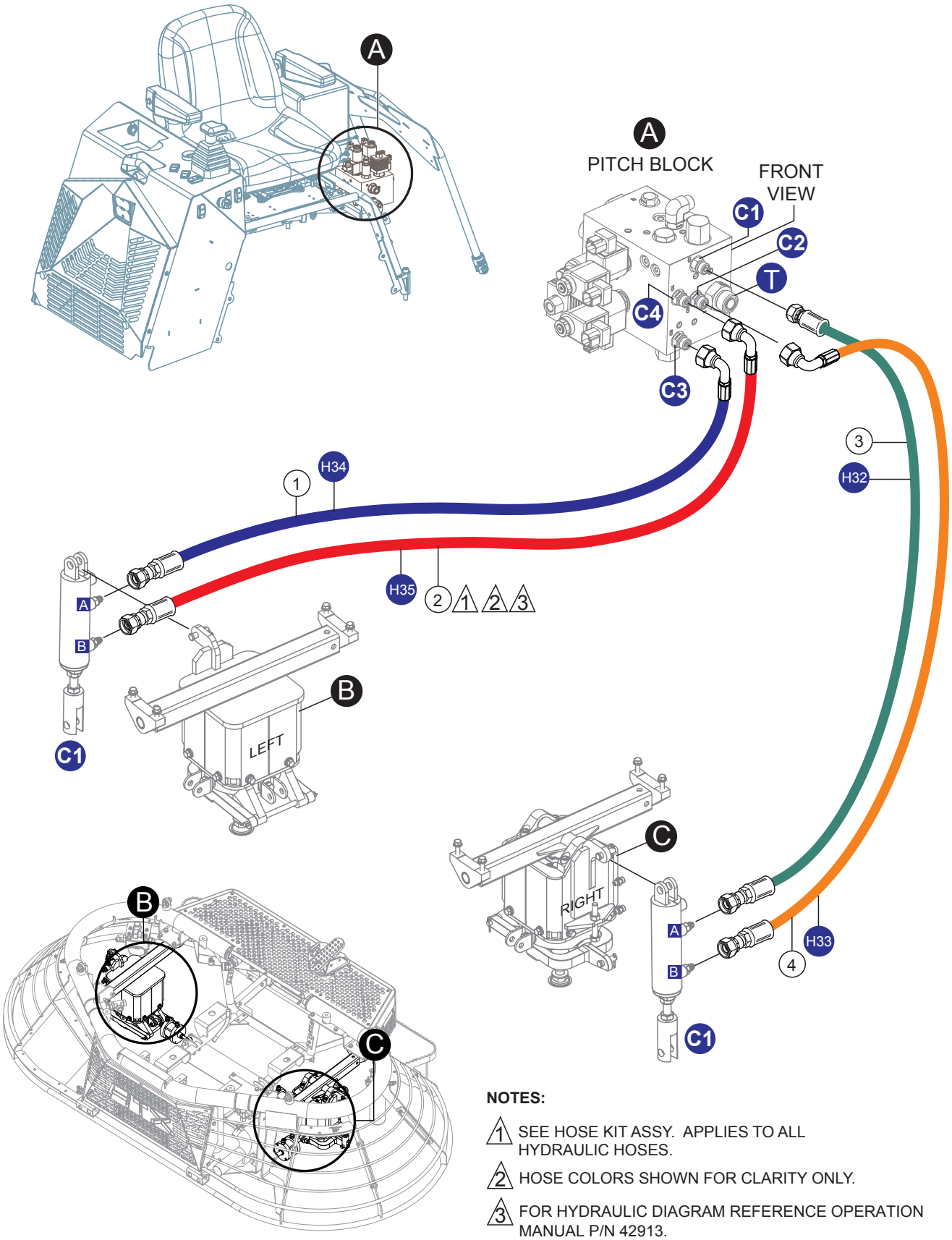

NOTES:

1. SEE HOSE KIT ASSY. APPLIES TO ALL HYDRAULIC HOSES.
2. HOSE COLORS SHOWN FOR CLARITY ONLY.
3. FOR HYDRAULIC DIAGRAM REFERENCE OPERATION MANUAL P/N 42913.

HYD. HOSE ASSY. (P. BLOCK PORTS C1~C4)

NO.	PART NO.	PART NAME	QTY.	REMARKS
1	43033	HOSE ASSY., 1/4" X 89.75 4FFORX 90S X 4FFORX	1	H34
2	43033	HOSE ASSY., 1/4" X 89.75 4FFORX 90S X 4FFORX	1	H35
3	43032	HOSE ASSY., 1/4" X 54.5 4FFORX X 4FFORX	1	H32
4	43042	HOSE ASSY., 1/4" X 54.5 4FFORX 90S X 4FFORX	1	H33

HYD. HOSE ASSY. (LH-RH STEERING VALVES #1)

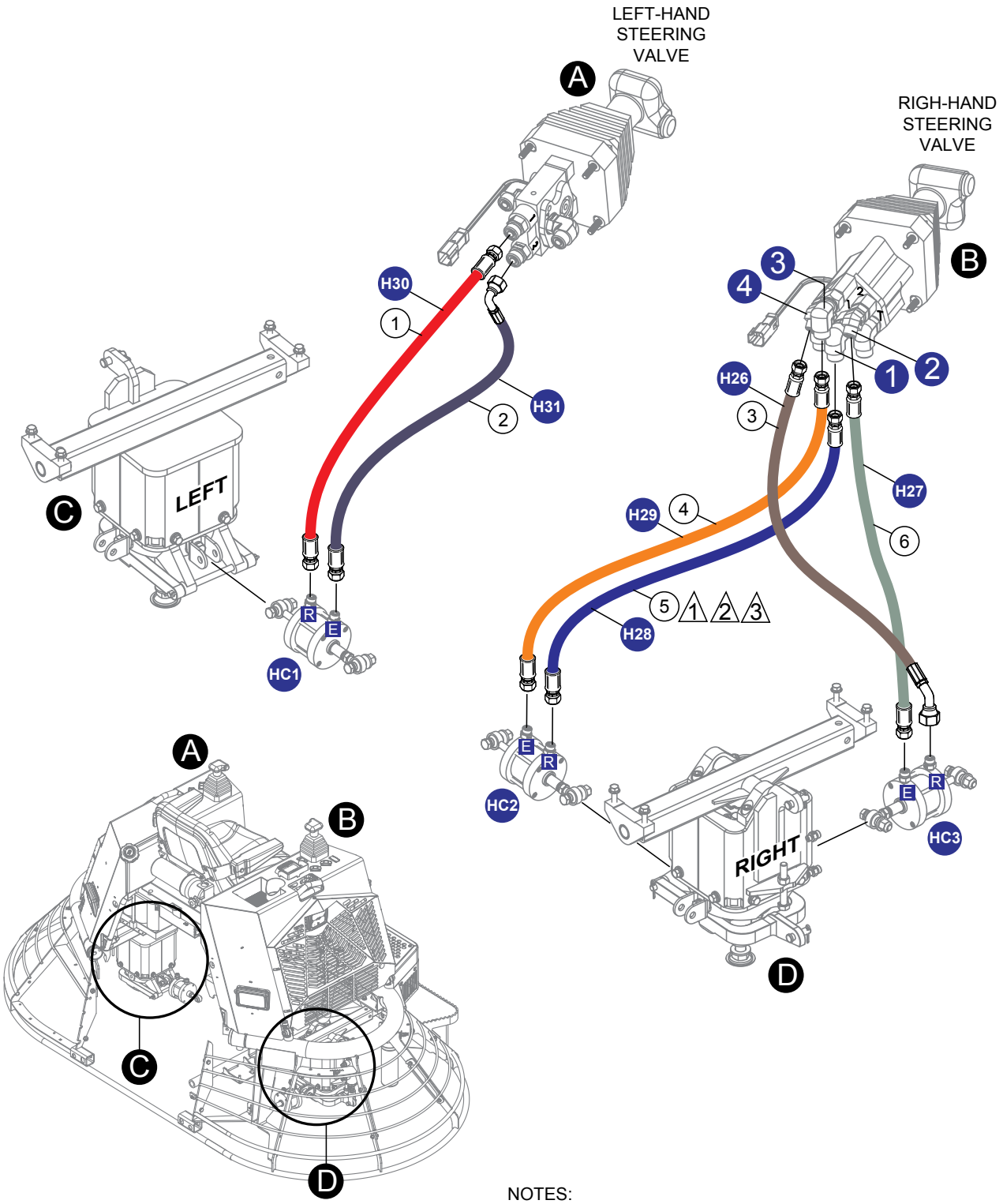

NOTES:

1. SEE HOSE KIT ASSY. APPLIES TO ALL HYDRAULIC HOSES.
2. HOSE COLORS SHOWN FOR CLARITY ONLY.
3. FOR HYDRAULIC DIAGRAM REFERENCE OPERATION MANUAL P/N 42913.

HYD. HOSE ASSY. (LH-RH STEERING VALVES #1)

NO.	PART NO.	PART NAME	QTY.	REMARKS
1	42872	HOSE ASSY., 3/8" X 53 6FFORX X 6FFORX	1	H30
2	42873	HOSE ASSY., 3/8" X 52.5 6FFORX X 6FFORX	1	H31
3	42868	HOSE ASSY., 3/8" X 58 6FFORX 90S X 6FFORX	1	H26
4	42871	HOSE ASSY., 3/8" X 48 6FFORX X 6FFORX	1	H29
5	42870	HOSE ASSY., 3/8" X 47.75 6FFORX X 6FFORX	1	H28
6	42869	HOSE ASSY., 3/8" X 58.75 6FFORX X 6FFORX	1	H27

HYD. HOSE ASSY. (LH-RH STEERING VALVES #2)

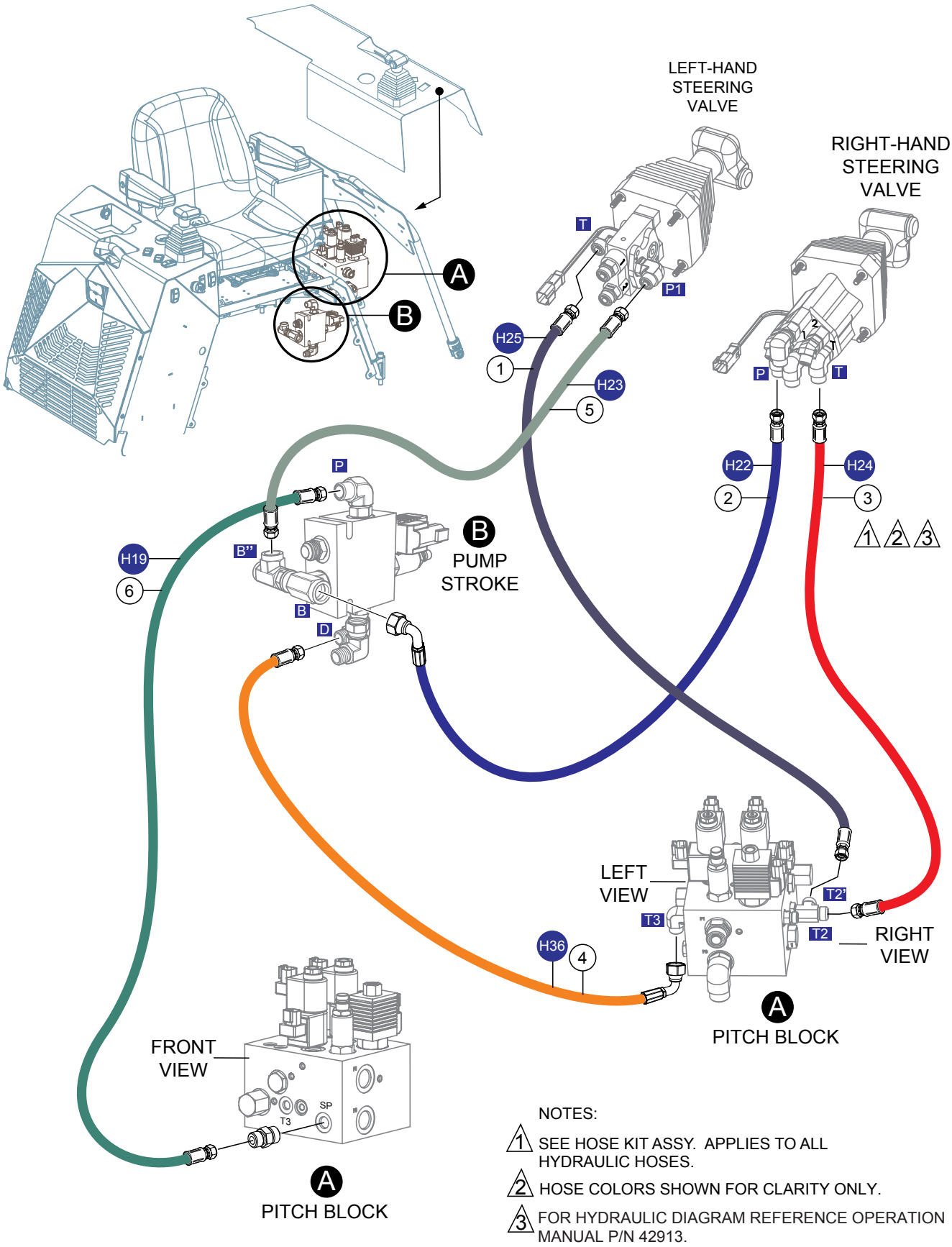

NOTES:

1. SEE HOSE KIT ASSY. APPLIES TO ALL HYDRAULIC HOSES.
2. HOSE COLORS SHOWN FOR CLARITY ONLY.
3. FOR HYDRAULIC DIAGRAM REFERENCE OPERATION MANUAL P/N 42913.

HYD. HOSE ASSY. (LH-RH STEERING VALVES #2)

NO.	PART NO.	PART NAME	QTY.	REMARKS
1	42867	HOSE ASSY., 3/8" X 58.5 6FFORX X 6FFORX	1	H25
2	42864	HOSE ASSY., 3/8" X 105.5 6FFORX 90S X 6FFORX	1	H22
3	42866	HOSE ASSY., 3/8" X 97.75 6FFORX 90S X 6FFORX	1	H24
4	42878	HOSE ASSY., 3/8" X 17.5 6FFORX 90S X 6FFORX	1	H36
5	42865	HOSE ASSY., 3/8" X 67 6FFORX X 6FFORX	1	H23
6	42861	HOSE ASSY., 3/8" X 13.5 6FFORX X 6FFORX	1	H19

HYD. HOSE ASSY. (P. BLOCK/FRAME/TANK/PUMP)

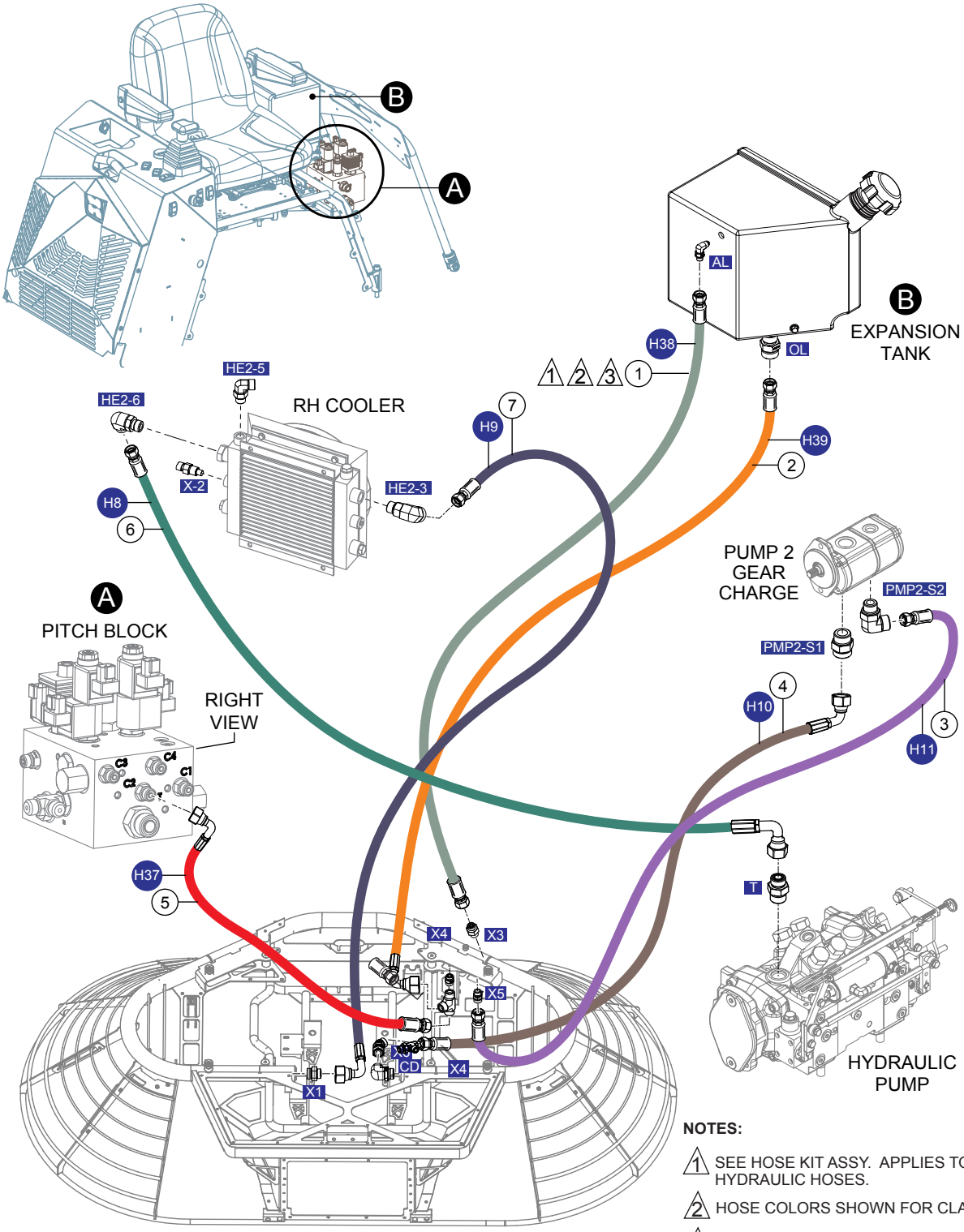

NOTES:

1. SEE HOSE KIT ASSY. APPLIES TO ALL HYDRAULIC HOSES.
2. HOSE COLORS SHOWN FOR CLARITY ONLY.
3. FOR HYDRAULIC DIAGRAM REFERENCE OPERATION MANUAL P/N 42913.

HYD. HOSE ASSY. (P. BLOCK/FRAME/TANK/PUMP)

NO.	PART NO.	PART NAME	QTY.	REMARKS
1	43038	HOSE ASSY., 1/4" X 32.5 6FFORX 90S X 4FFORX	1	H38
2	43039	HOSE ASSY., 1/4" X 26 4FFORX X 4FFORX 5K	1	H39
3	43011	HOSE ASSY., 3/4" X 21.5 12FFORX X 12FFORX	1	H11
4	43010	HOSE ASSY., 1" X 47.0 16FFORX X 16FFORX 90S	1	H10
5	43037	HOSE ASSY., 3/4" X 27.0 12FFORX X 12FFORX 90S	1	H37
6	43008	HOSE ASSY., 5/8" X 27.25 10FFORX 90S X 10FFORX	1	H8
7	43009	HOSE ASSY., 3/4" X 21.0 10FFORX X 16FFORX 90S	1	H9

HYD. HOSE ASSY. (P. BLOCK/COOLER/PUMP)

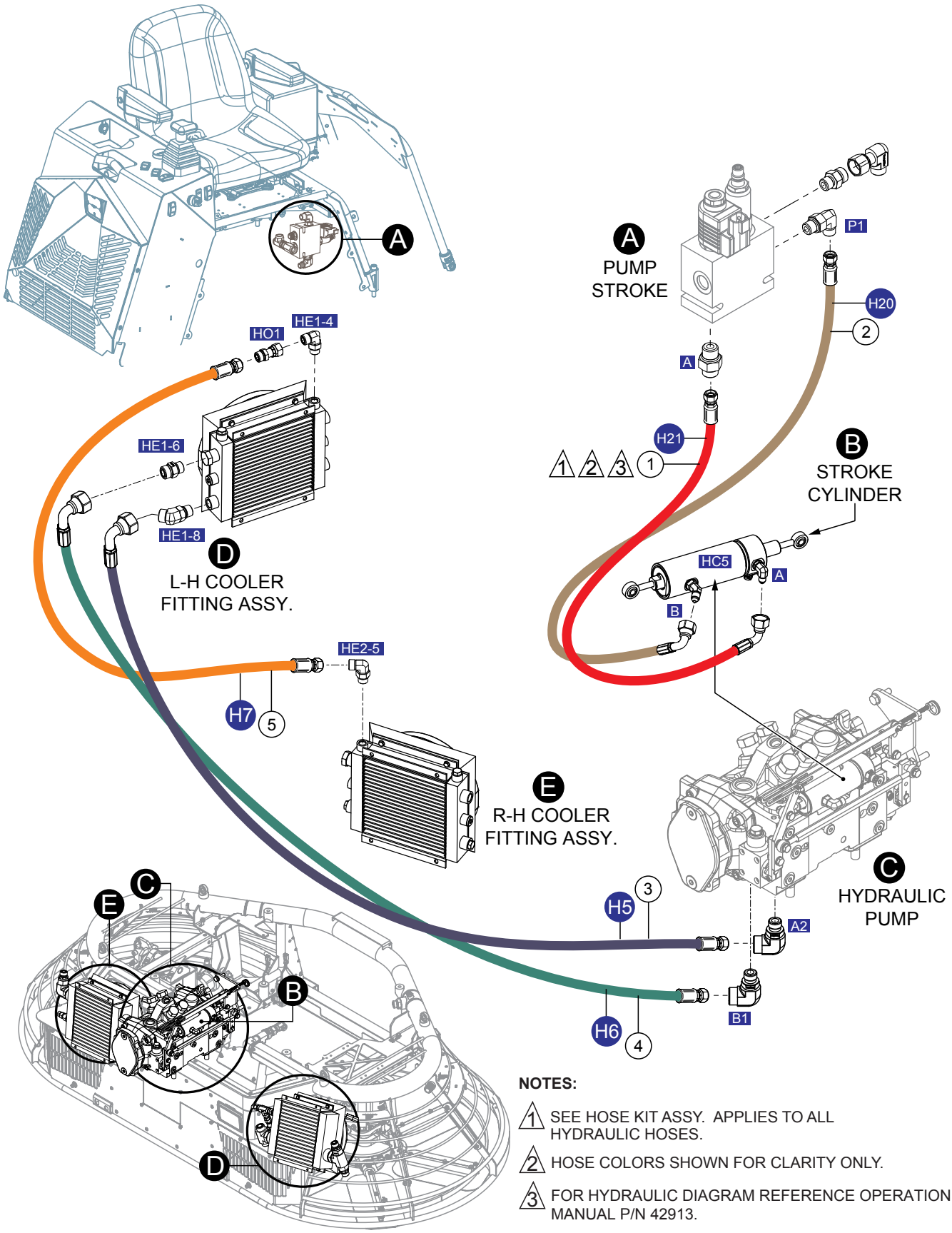

NOTES:

1. SEE HOSE KIT ASSY. APPLIES TO ALL HYDRAULIC HOSES.
2. HOSE COLORS SHOWN FOR CLARITY ONLY.
3. FOR HYDRAULIC DIAGRAM REFERENCE OPERATION MANUAL P/N 42913.

HYD. HOSE ASSY. (P. BLOCK/COOLER/PUMP)

NO.	PART NO.	PART NAME	QTY.	REMARKS
1	42863	HOSE ASSY., 1/4" X 33.75 4FFORX X 4FFORX 45S	1	H21
2	42862	HOSE ASSY., 1/4" X 46.38 4FFORX X 4FFORX 90S	1	H20
3	43005	HOSE ASSY., 5/8" X 24.0 10FFORX 90S X 10FFORX	1	H5
4	43006	HOSE ASSY., 5/8" X 29.5 10FFORX 90S X 10FFORX	1	H6
5	43007	HOSE ASSY., 1/2" X 46.5 8FFORX X 8FFORX	1	H7

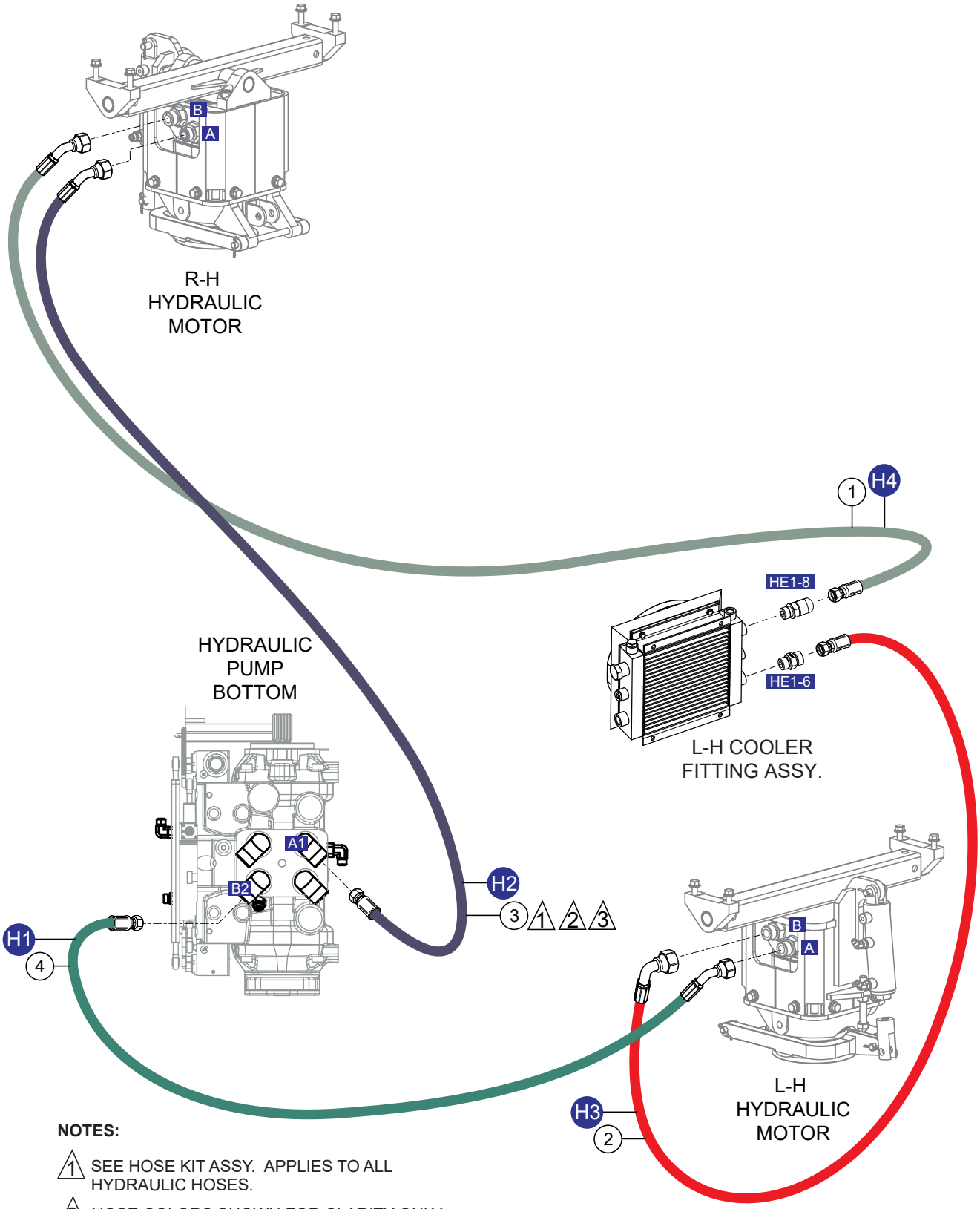

NOTES:

1. SEE HOSE KIT ASSY. APPLIES TO ALL HYDRAULIC HOSES.
2. HOSE COLORS SHOWN FOR CLARITY ONLY.
3. FOR HYDRAULIC DIAGRAM REFERENCE OPERATION MANUAL P/N 42913.

HYD. HOSE ASSY. (COOLER/MOTORS/PUMP)

NO.	PART NO.	PART NAME	QTY.	REMARKS
1	43004	HOSE ASSY., 5/8" X 64.75 10FFORX 90S X 10FFORX	1	H4
2	43003	HOSE ASSY., 5/8" X 22.5 10FFORX 90S X 10FFORX	1	H3
3	43002	HOSE ASSY., 5/8" X 33.75 10FFORX X 10FFORX 90S	1	H2
4	43001	HOSE ASSY., 5/8" X 33.75 10FFORX X 10FFORX 90S 5K	1	H1

HYD. HOSE ASSY. (P. BLOCK/P. STROKER/PUMP/FILTER)

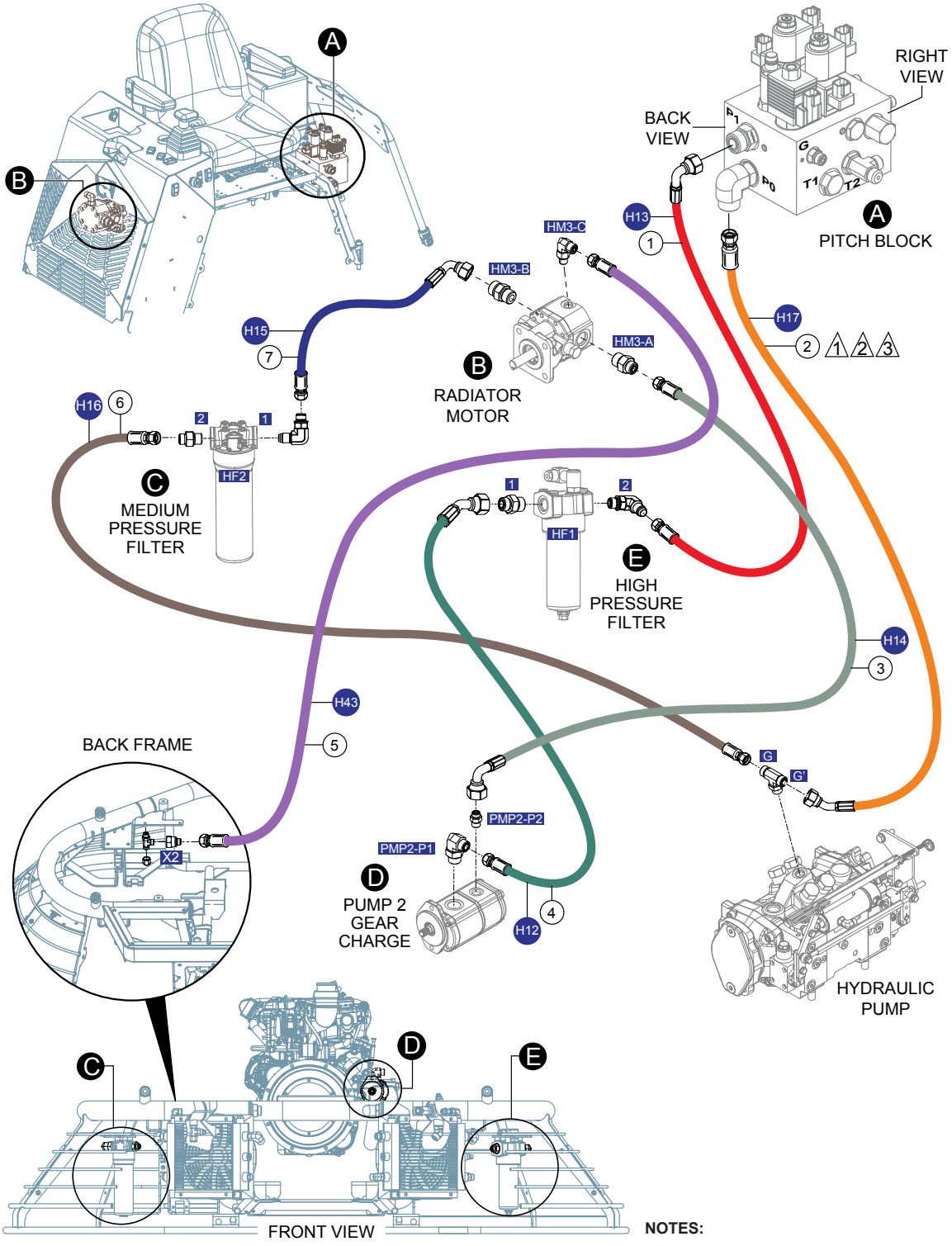

NOTES:

1. SEE HOSE KIT ASSY. APPLIES TO ALL HYDRAULIC HOSES.
2. HOSE COLORS SHOWN FOR CLARITY ONLY.
3. FOR HYDRAULIC DIAGRAM REFERENCE OPERATION MANUAL P/N 42913.

HYD. HOSE ASSY. (P. BLOCK/P. STROKER/PUMP/FILTER)

NO.	PART NO.	PART NAME	QTY.	REMARKS
1	43013	HOSE ASSY., 1/2" X 40.0 8FFORX 90S X 8FFORX	1	H13
2	43044	HOSE ASSY., 1/2" X 41 8FFORX 45S X 8FFORX	1	H17
3	43014	HOSE ASSY., 3/8" X 56.0 6FFORX 90S X 6FFORX	1	H14
4	43012	HOSE ASSY., 1/2" X 28.5 8FFORX X 8FFORX 45S	1	H12
5	43043	HOSE ASSY., 1/4" X 22.5 4FFORX X 4FFORX	1	H43
6	43016	HOSE ASSY., 1/2" X 33.5 8FFORX 45S X 8FFORX	1	H16
7	43015	HOSE ASSY., 1/2" X 33.25 8FFORX 90S X 8FFORX	1	H15

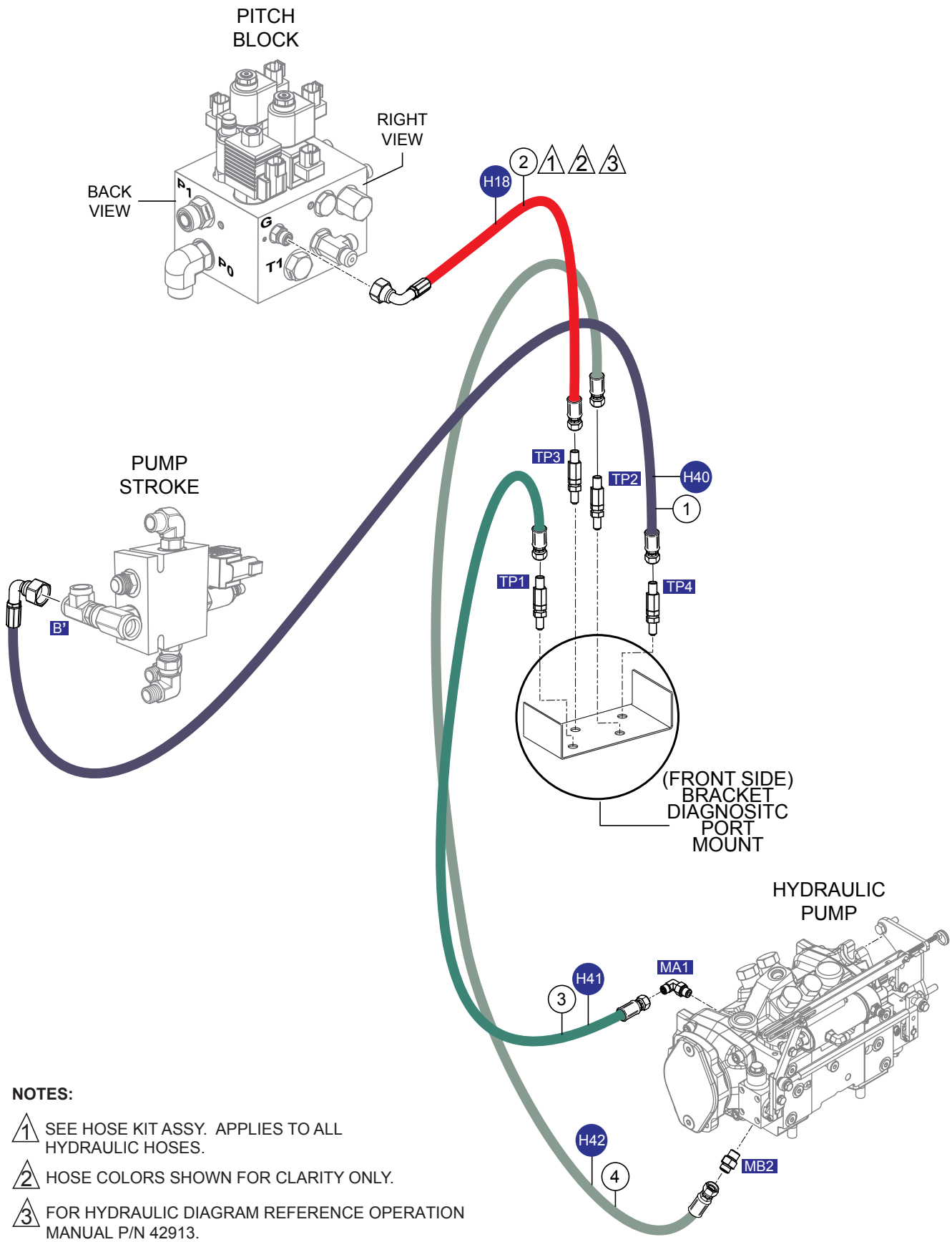

NOTES:

1. SEE HOSE KIT ASSY. APPLIES TO ALL HYDRAULIC HOSES.
2. HOSE COLORS SHOWN FOR CLARITY ONLY.
3. FOR HYDRAULIC DIAGRAM REFERENCE OPERATION MANUAL P/N 42913.

HYD. HOSE ASSY. (TEST PORT)

NO.	PART NO.	PART NAME	QTY.	REMARKS
1	43040	HOSE ASSY., 1/4" X 74 4FFORX X 4FFORX 5K	1	H40
2	43018	HOSE ASSY., 1/4" X 68.25 4FFORX 90S X 4FFORX 5K	1	H18
3	43041	HOSE ASSY., 1/4" X 20 4FFORX X 4FFORX	1	H41
4	43041	HOSE ASSY., 1/4" X 20 4FFORX X 4FFORX	1	H42

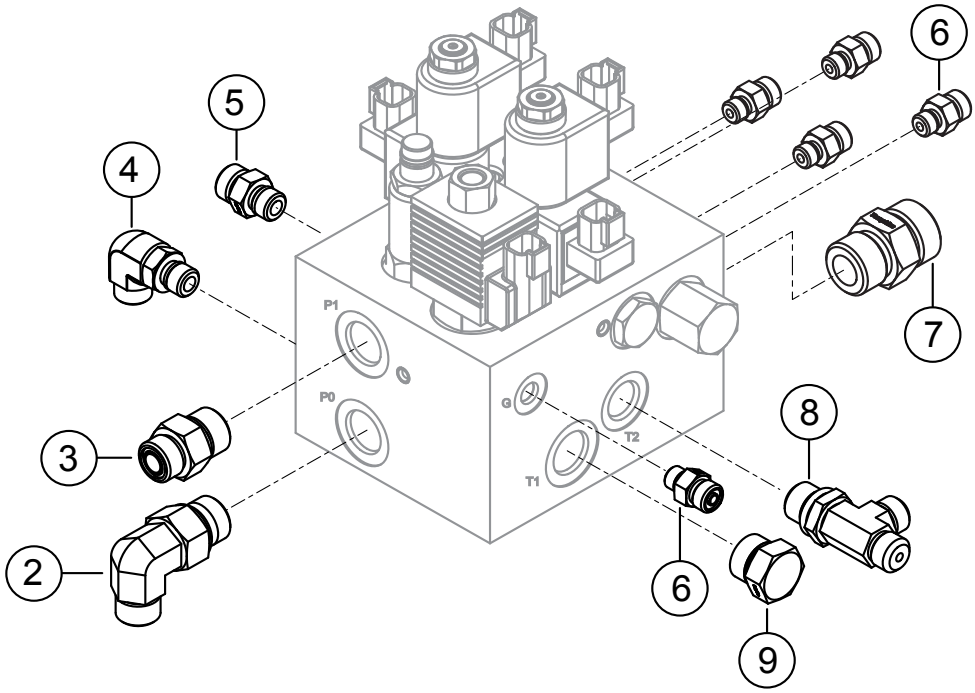
6
5
4
7
P1
P0
G
T2
T1
8
3
2
6
9

PITCH BLOCK FITTINGS ASSY.

NO.	PART NO.	PART NAME	QTY.	REMARKS
2	32722	FITTING, 90° 8MORFS X 10MOR	1	
3	42941	FITTING, STRAIGHT 8MORFS X 10MOR	1	
4	32354	FITTING, 90° -6MORFS X -6MOR	1	
5	32341	FITTING, STRAIGHT -6MORFS X -6MOR	1	
6	32340	FITTING, STRAIGHT -4MORFS X -4MOR	5	
7	32343	FITTING, STRAIGHT -12MORFS X -12MOR	1	
8	32351	FITTING, TEE 6MORFS X 8MOR	1	
9	32468	FITTING, PLUG-ORING - 10	1	

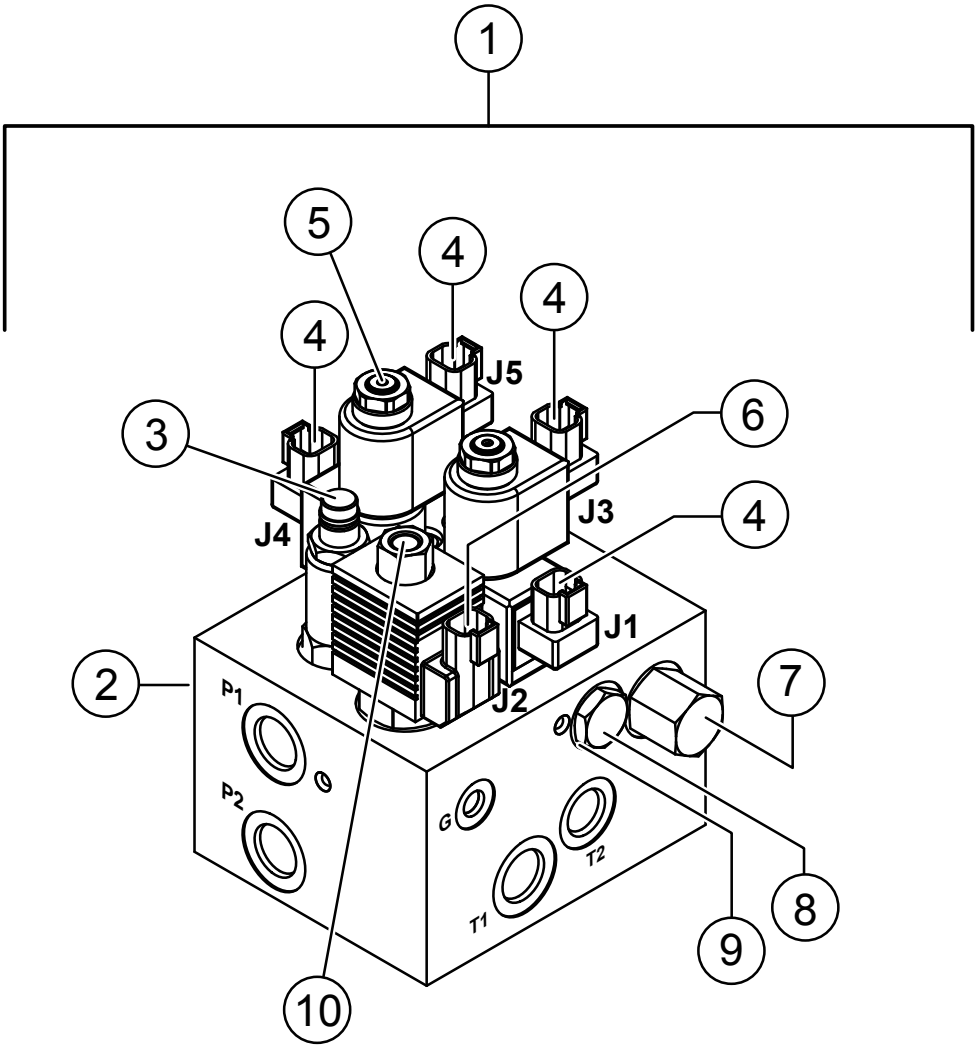
1
5
4
4
4
J5
3
6
J4
J3
4
J1
2
7
P1
J2
P2
G
T2
T1
8
9
10

NO.	PART NO.	PART NAME	QTY.	REMARKS
1	22233	PITCH BLOCK ASSEMBLY	1	INCLUDES ITEMS W/$
3$	22233-7	RELIEF VALVE	1	
4$	22233-4	SOLENOID, PITCH VALVE	4	
5$	22233-3	PITCH VALVE	2	
6$	22233-2	SOLENOID, BYPASS VALVE	1	
7$	22233-6	FLOW CONTROL VALVE	2	
8$		PISTON	2	NOT SOLD SEPARATELY
9$	22233-5	CHECK VALVE	2	
10$	22233-1	BYPASS VALVE CARTRIDGE	1	

HYDRAULIC OIL EXPANSION TANK ASSY.

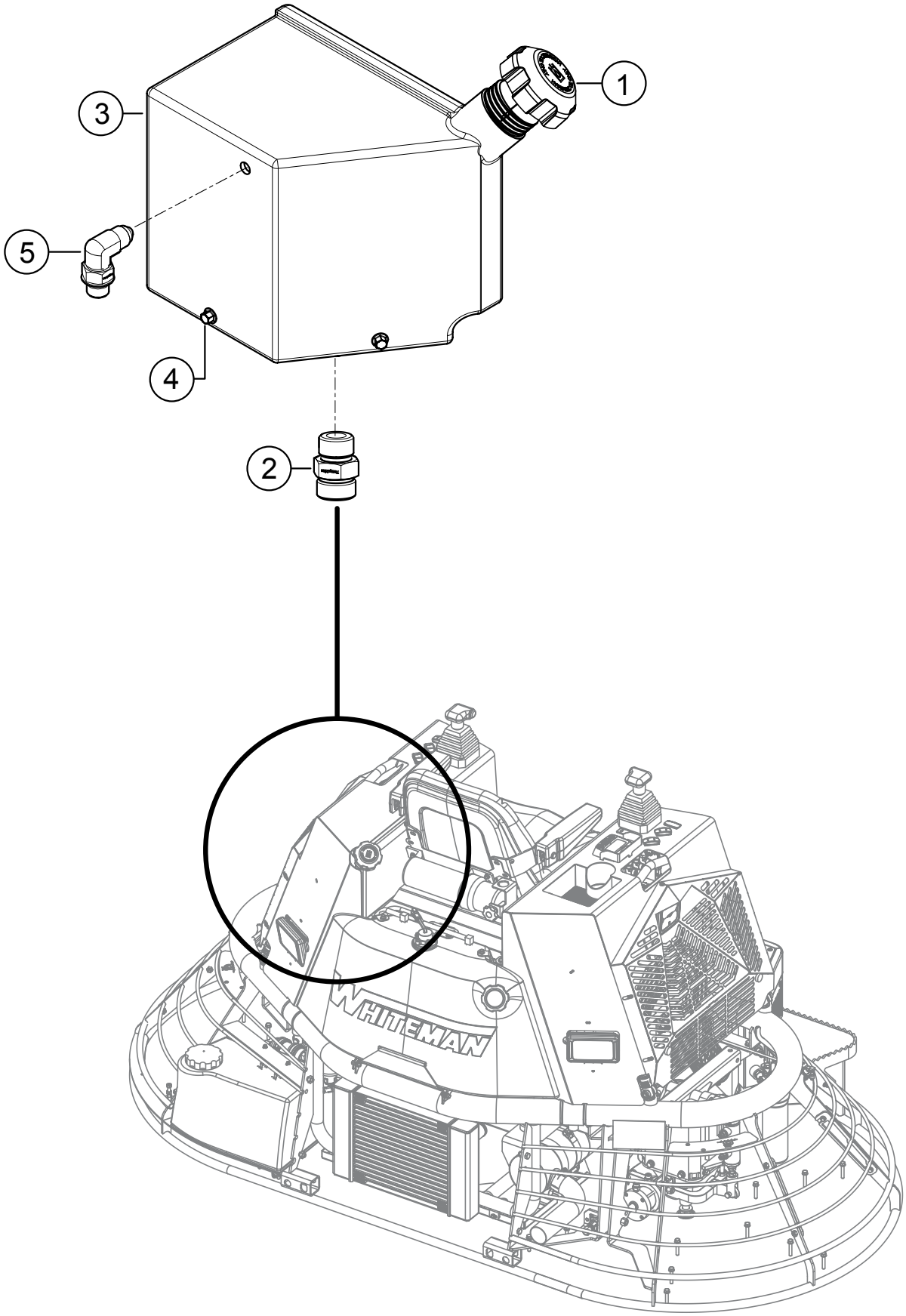

HYDRAULIC OIL EXPANSION TANK ASSY.

NO.	PART NO.	PART NAME	QTY.	REMARKS
1	42551	RACHET CAP, TOP VENT	1	
2	32343	FITTING, STRAIGHT -12MORFS X -12MOR	1	
3	42090	TANK, GEN 3 HYDRAULIC EXPANSION	1	
4	42342	SCREW, HFS, ZP, M8-1.25 X 16	3	
5	32347	FITTING, 90° -4MORFS X -4MOR	1	

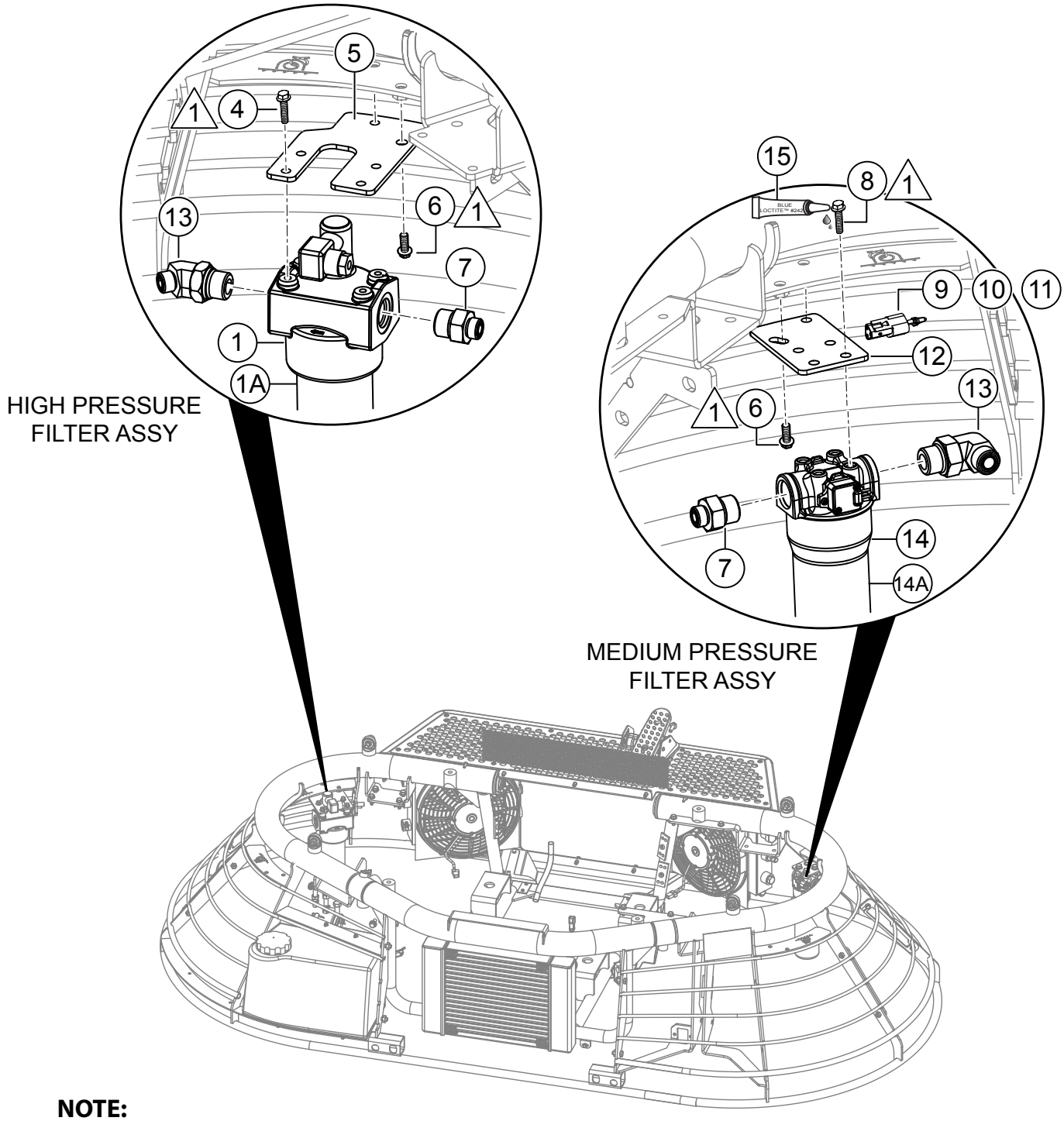

NOTE:

1 APPLY BLUE LOCTITE™ #242.

NO.	PART NO.	PART NAME	QTY.	REMARKS
1	42615	FILTER ASSY., HIGH, 10 MICRON, BYPASS IND.	1	
1A	42615-1	FILTER, HYDRAULIC HP ELEMENT	1	
4	42342	SCREW, HFS ZP M8-1.25 X 16	4	
5	42774	MOUNT PLATE, HYDRAULIC HIGH FILTER	1	
6	42343	SCREW, HFS, ZP, M8-1.25 X 20	4	
7	32711	FITTING, STRAIGHT 8MORFS X 12MOR	2	
8	38274	SCREW, HHFS 3/8"-16 X .75 ZINC	4	
9	46192	PIN, DEUTSCH 16, 16-20 AWG	3	
10	EE50818	CONNECTOR	1	
11	EE50819	WEDGE LOCK	1	
12	42773	MOUNT PLATE, HYDRAULIC MED. FILTER	1	
13	32712	FITTING, 90° 8MORFS X 12MOR	2	
14	42616	FILTER ASSY., MED., 10 MICRON, BYPASS IND.	1	
14A	42616-1	FILTER, HYDRAULIC MEDIUM ELEMENT	1	
15	1477	LOCTITE™ #242 BLUE, 0.5 CC BOTTLE	1	

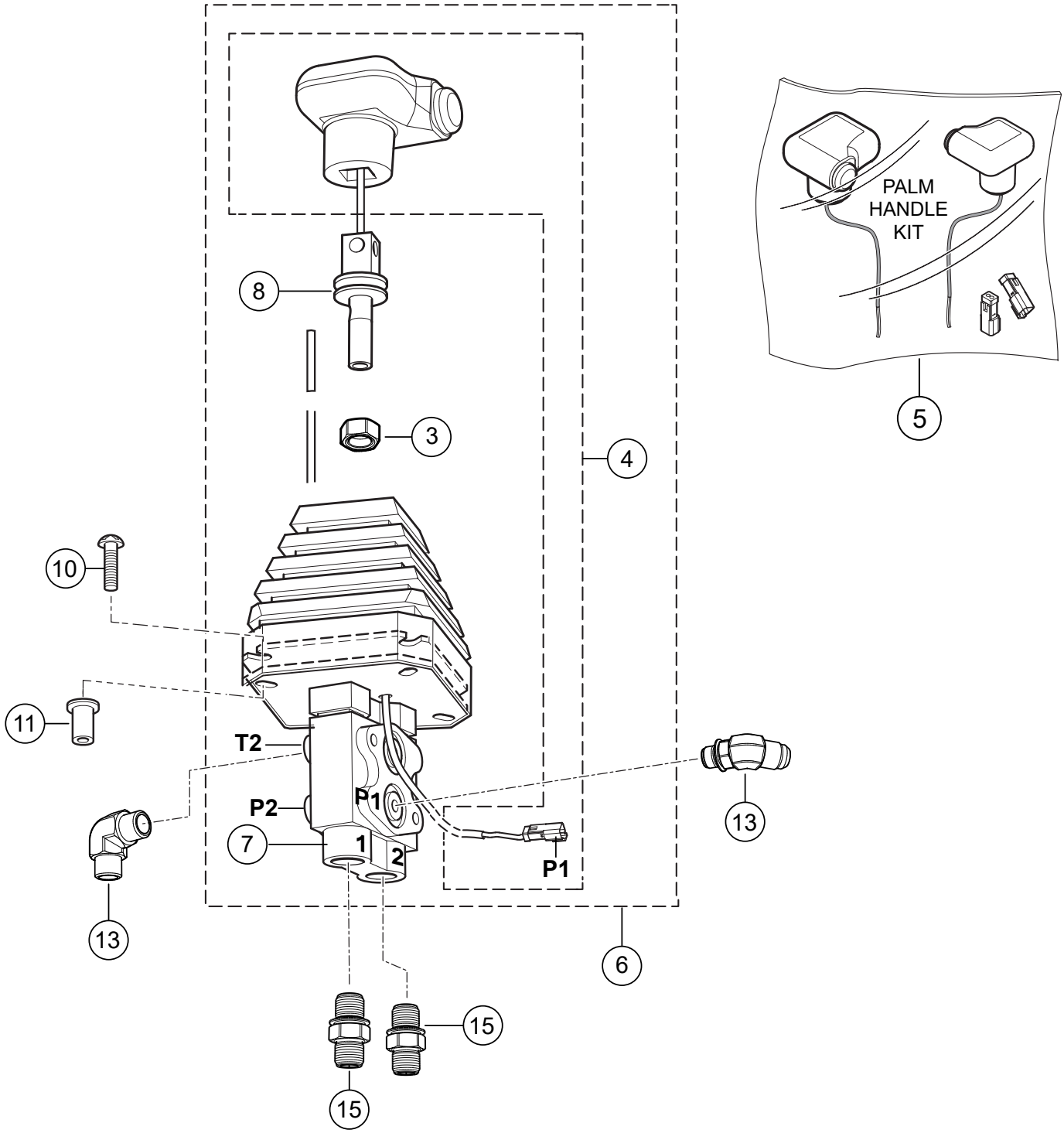
PALM
HANDLE
KIT
5
8
3
4
10
11
T2
P2
P1
7
1
2
P1
13
13
6
15
15

LEFT-HAND VALVE ASSY.

NO.	PART NO.	PART NAME	QTY.	REMARKS
3#	16083	NUT, HEX M12-1.75 NO PLATE	1	
4#	20150	KIT, PALM HANDLE LEFT, WITH SWITCH	1	
5	20165	KIT, PALM HANDLE WITH TOGGLE SWITCH	1	
6	42831	VALVE, LH STEERING W/SWITCH ASSY.....	1	INCLUDES ITEMS W/#
7#	20833	VALVE, LH STEERING	1	
8#	21053	ADAPTER, LH PALM HANDLE	1	
10	42325	SCREW, BHC, M6-1.0 X 20, FLANGED	4	
11	42496	RIVNUT FASTENER, HALF HEX M6 X 1	4	
13	32354	FITTING, 90° -MORFS X -6MOR	2	
15	32341	FITTING, STRAIGHT -6MORFS X -6MOR	2	

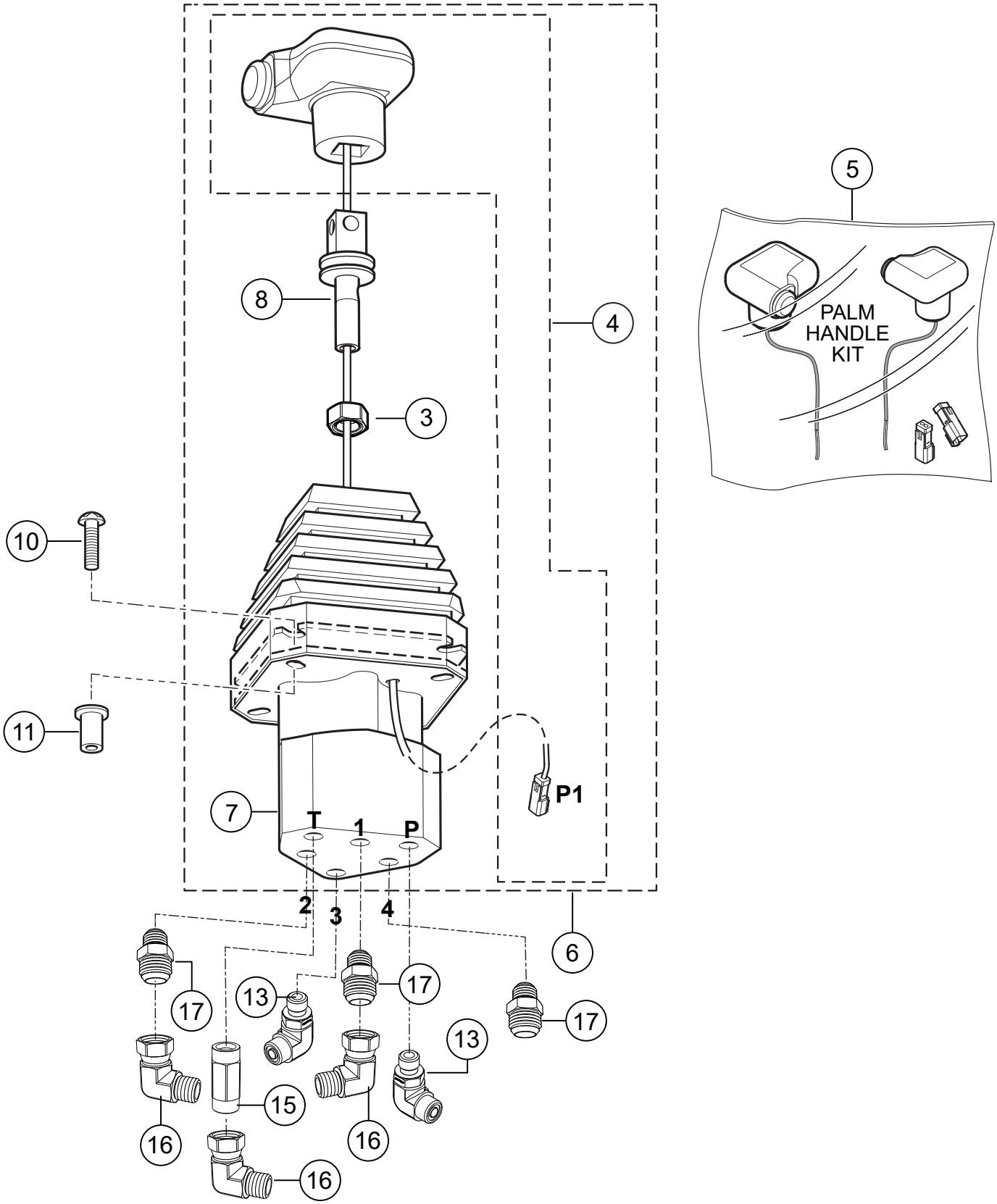
5
PALM
HANDLE
KIT
8
4
3
10
11
7
T
1
P
P1
2
3
4
6
17
17
17
17
13
13
15
16
16
16

NO.	PART NO.	PART NAME	QTY.	REMARKS
3#	16083	NUT, HEX M12-1.75 NO PLATE	1	
4#	20155	KIT, PALM HANDLE RIGHT, WITH SWITCH	1	
5	20165	KIT, PALM HANDLE WITH TOGGLE SWITCH	1	
6	42832	VALVE, RH STRG. WITH SWITCH ASSY.	1	INCLUDES ITEMS W/#
7#	20832	VALVE, RH STEERING	1	
8#	20834	ADAPTER, PALM HANDLE	1	
10	42325	SCREW, HHC M6-1.0 X 20	4	
11	42496	RIVNUT FASTENER, HALF HEX M6 X 1	4	
13	32354	FITTING, 90° -6MORFS X 6 MOR	2	
15	32454	FITTING, STRAIGHT 6MORFS X 6MORFS LONG	1	
16	32256	FITTING, 90° 6FORFS X 6MORFS	3	
17	32341	FITTING, STRAIGHT -6MORFS X -6MOR	3	

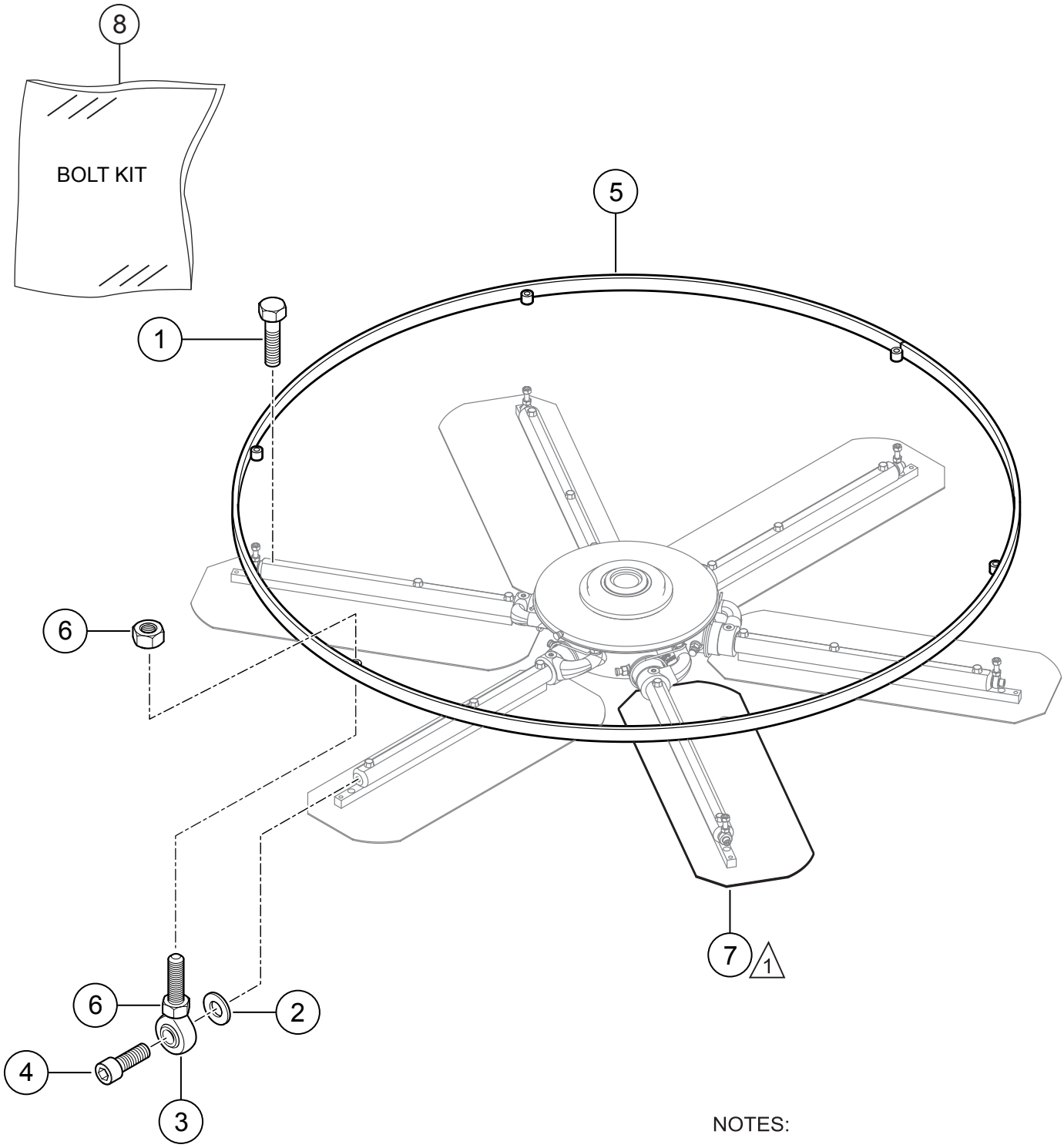

NOTES:

1 TO PURCHASE BLADES CONTACT UNIT SALES DEPT.

NO.	PART NO.	PART NAME	QTY.	REMARKS
1$	22174	SCREW, HHFS 5/16"-18 X 1-3/4" GRD 5	38	
2	0300 B	WASHER, FLAT SAE 5/16"	12	
3	1723	ROD END 5/16"-24 MALE RH	12	
4	1237	SCREW, SHC 5/16"-18 X 7/8" NYLOC	12	
5	12185	RING, BLADE STABILIZER	2	
6	6014 C	NUT, HEX FINISH 5/16"-24	24	
7		BLADE ASSEMBLY	12	CONTACT UNIT SALES DEPT.
8	23643	KIT, BOLT SAE BLADE	1	INCLUDES ITEMS W/$

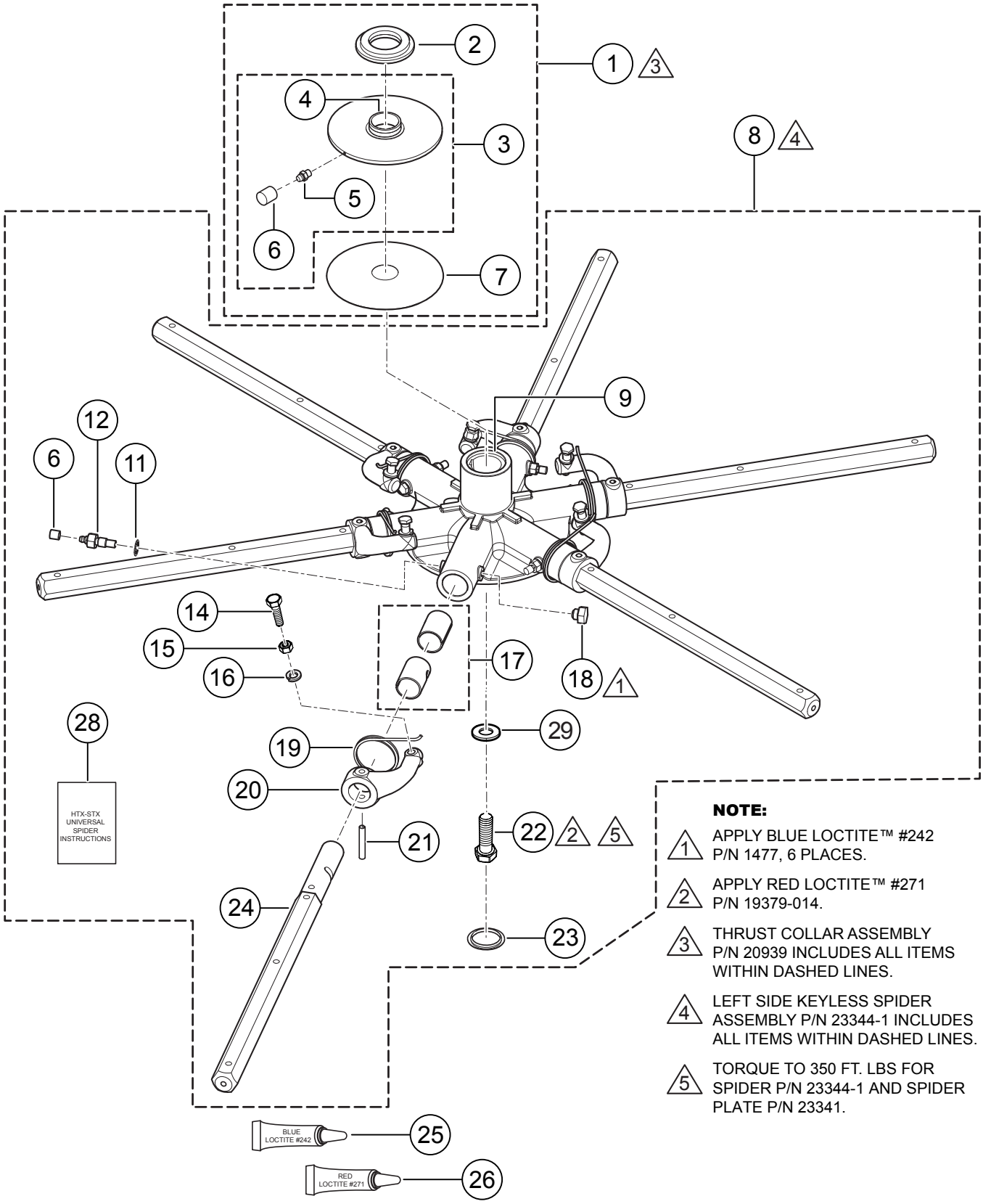

NOTE:

1. APPLY BLUE LOCTITE™ #242 P/N 1477, 6 PLACES.
2. APPLY RED LOCTITE™ #271 P/N 19379-014.
3. THRUST COLLAR ASSEMBLY P/N 20939 INCLUDES ALL ITEMS WITHIN DASHED LINES.
4. LEFT SIDE KEYLESS SPIDER ASSEMBLY P/N 23344-1 INCLUDES ALL ITEMS WITHIN DASHED LINES.
5. TORQUE TO 350 FT. LBS FOR SPIDER P/N 23344-1 AND SPIDER PLATE P/N 23341.

NO.	PART NO.	PART NAME	QTY.	REMARKS
1	20939	THRUST COLLAR ASSEMBLY	1	INCLUDES ITEMS W/@
2@	12779	BEARING, 85 MM X 130 MM, FLANGED	1	
3@	12315	THRUST COLLAR W/BUSHING	1	INCLUDES ITEMS W/$
4@$	12316	BUSHING, THRUST COLLAR	1	
5@	2621	ZERK, GREASE STRAIGHT 1/4"-28	1	
6#@	1162 A	CAP, GREASE ZERK #2	7	
7@	12250	PLATE, WEAR	1	
8	23344-1	SPIDER, 6 BLD. TAPERED LS SERV. KIT.	1	INCLUDES ITEMS W/#
9#	23341	SPIDER 6 BLADE SERVICE KIT	1	INCLUDES ITEMS W/%
11#	1875	WASHER, INT. SHKP. 3/8"	6	
12#	1322	SCREW, RETAINING	6	
14#	21031	SCREW, HHC 7/16"-14 GRD 8	6	
15#	07034-007	NUT, HEX JAM 7/16"-14	6	
16#	2955	WASHER, LOCK 7/16" MEDIUM	6	
17#	11039	BUSHING, ARM 2 PIECE	12	
18#%	11602	SCREW, HHC 3/8"-16 X 1/4"	6	
19#	9111	SPRING, LS ARM RETURN, SMALL BOSS	6	
20#	21049-1	LEVER, TROWEL ARM, LS SILVER	6	
21#	32045	PIN, COILED SPRING 5/16"-2.00"	6	
22#%	32788	SCREW, HHC 3/4"-16 X 2-1/4", GRD 8	1	
23#%	20121	PLUG, 1.75" DIA.	1	
24#	11991-1	ARM, TROWEL BLADE	6	
25	1477	LOCTITE™ #242 BLUE 0.5 CC BOTTLE	1	
26	19379-014	LOCTITE™ #271 RED, ANAEROBIC	1	
28#%	32771	INSTR., SPIDER, UNIVERSAL, STX	1	SEE NOTICE BELOW
29#%	933247	WASHER, FLAT SAE 3/4" GRD 9	1	

NOTICE

To download a copy of the instructions, go to our website: http://service.multiquip.com/instructions-trowels-hydraulic-ride-on.html

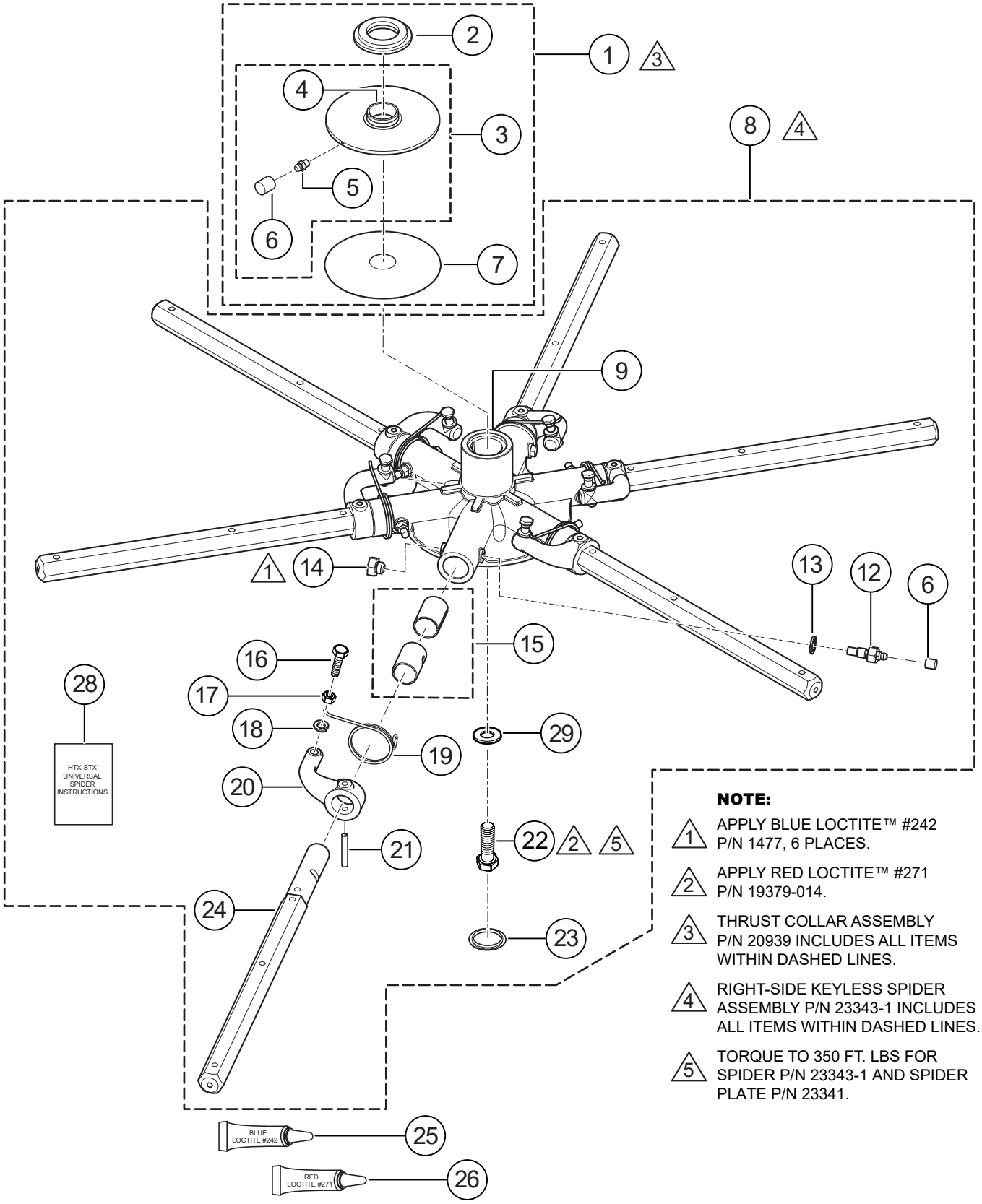

NOTE:

1. APPLY BLUE LOCTITE™ #242 P/N 1477, 6 PLACES.
2. APPLY RED LOCTITE™ #271 P/N 19379-014.
3. THRUST COLLAR ASSEMBLY P/N 20939 INCLUDES ALL ITEMS WITHIN DASHED LINES.
4. RIGHT-SIDE KEYLESS SPIDER ASSEMBLY P/N 23343-1 INCLUDES ALL ITEMS WITHIN DASHED LINES.
5. TORQUE TO 350 FT. LBS FOR SPIDER P/N 23343-1 AND SPIDER PLATE P/N 23341.

6-BLADE SPIDER ASSY. (RIGHT-SIDE)

NO.	PART NO.	PART NAME	QTY.	REMARKS
1	20939	THRUST COLLAR ASSEMBLY	1	INCLUDES ITEMS W/@
2@	12779	BEARING, 85 MM X 130 MM, FLANGED	1	
3@	12315	THRUST COLLAR W/BUSHING	1	INCLUDES ITEM W/$
4@$	12316	BUSHING, THRUST COLLAR	1	
5@	2621	ZERK, GREASE STRAIGHT 1/4"-28	6	
6#@	1162 A	CAP, GREASE ZERK #2	7	
7@	12250	PLATE, WEAR	1	
8	23343-1	SPIDER, 6 BLD. TAPERED, RS SERV. KIT	1	INCLUDES ITEMS W/#
9#	23341	SPIDER 6 BLADE SERVICE KIT	1	INCLUDES ITEMS W/%
12#	1322	SCREW, RETAINING	6	
13#	1875	WASHER, INT. SHKP. 3/8"	6	
14#%	11602	SCREW, HHC 3/8"-16 X 1/4"	6	
15#	11039	BUSHING ARM 2 PIECE	12	
16#	21031	SCREW, HHC 7/16"-14 GRD 8	6	
17#	07034-007	NUT, HEX JAM 7/16"-14	6	
18#	2955	WASHER, LOCK, 7/16" MED.	6	
19#	2143	SPRING, RS ARM RETURN, SMALL BOSS	6	
20#	21050-1	LEVER, TROWEL ARM HYD. RS. SILVER	6	
21#	32045	PIN, COILED SPRING 5/16" X 2"	6	
22#%	32788	SCREW, HHC 3/4"-16 X 2-1/4" GRD 8	2	
23	20121	PLUG, 1.75" DIA.	1	
24#	11991-1	ARM, TROWEL BLADE	6	
25	1477	LOCTITE™ #242 BLUE 0.5 CC BOTTLE	1	
26	19379-014	LOCTITE™ #271 RED, ANAEROBIC	1	
28#%	32771	INSTR., SPIDER, UNIVERSAL, STX	1	SEE NOTICE BELOW
29#%	933247	WASHER, FLAT SAE 3/4" GRD 9	1	

NOTICE

To download a copy of the instructions, go to our website: http://service.multiquip.com/instructions-trowels-hydraulic-ride-on.html

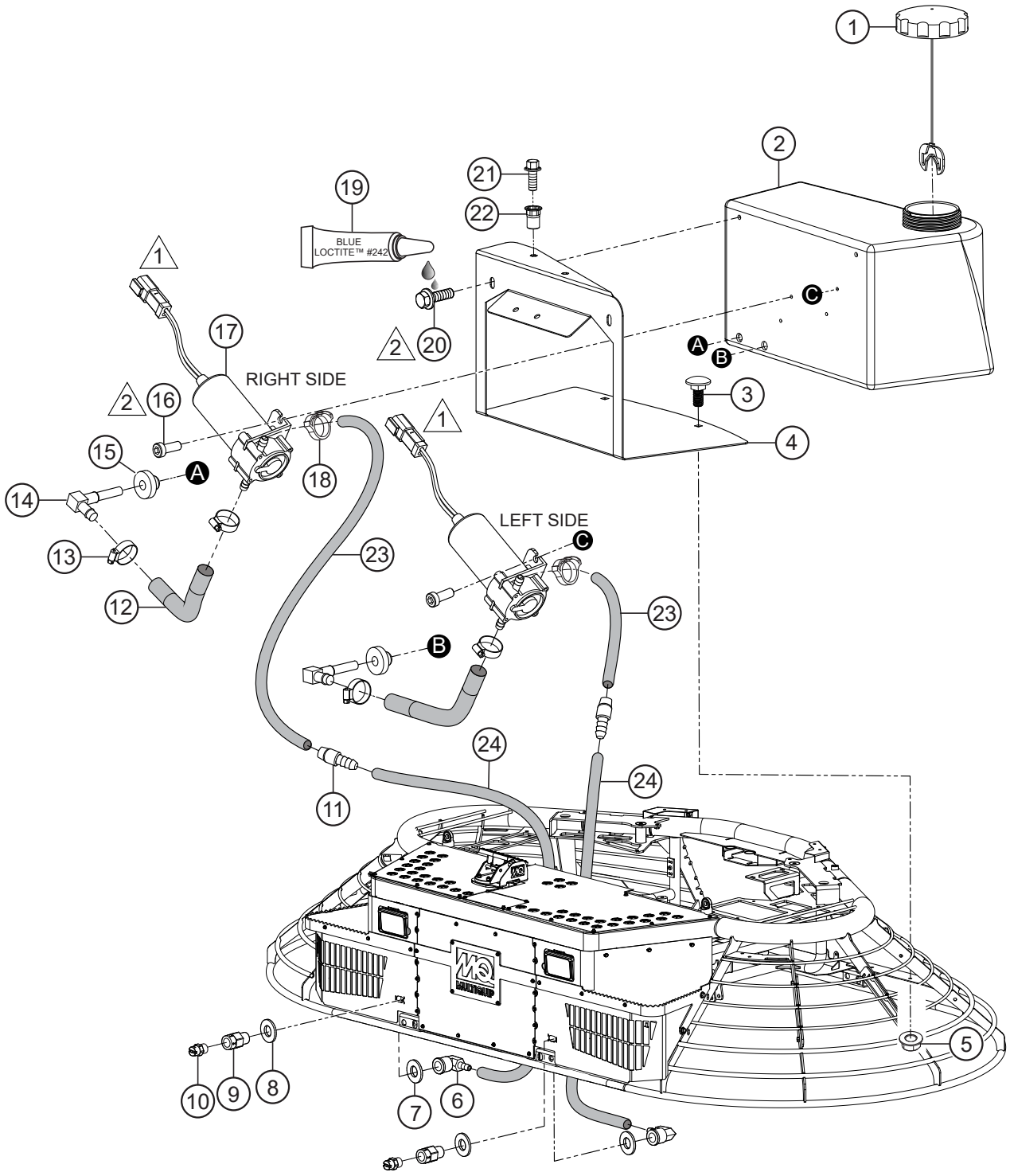

NOTE:

1 CONNECTS TO MAIN HARNESS.

2 APPLY LOCTITE™ #242.

SPRAY ASSY. (S/N NH2003616 AND BELOW)

NO.	PART NO.	PART NAME	QTY.	REMARKS
1	42435	CAP, RETARDANT TANK LANYARD, 3.5"	1	
2	42569	TANK, TIER 4 RETARDANT	1	
3	42822	SCREW, CB, M8 X 1.25 X 20	2	
4	42818	BRACKET, RETARDANT TANK	1	
5	23802	NUT, HEX FLANGE M8-1.25 SERRATED	2	
6	2912	FITTING, BRASS 90° 4BARB-1/4"FP	2	
7	16630	WASHER, FLAT SAE 1/2"	2	
8	2898	WASHER, BONDED NEOPRENE 1" X 1/2"	2	
9	42637	CHECK VALVE, 1/4" MNPT X 1/4" FNPT 3PSI	2	
10	392292	NOZZLE, SPRAY	2	
11	10022	FITTING, PLASTIC 6BARB-4BARB	2	
12	60021	HOSE, 3/8" ID. X 5/8" OD., BRAIDED PVC (1.21 FT.)	2	1PC=1FT
13	15538	CLAMP, HOSE WORM #6, 7/16" TO 7/8"	4	
14	29677	FITTING, 90™ 6BARB X 6-4BARB TRUTANK SCREEN	2	
15	19633	BUSHING, RUBBER FUEL	2	
16	37843	SCREW, SHC LOW HEAD M6-1.0 X 16 MM GRD 8.8	4	
17	23434	PUMP, SPRAY W\MALE & FEMALE CONNECTOR	2	
18	2918	CLAMP, HOSE PLASTIC	2	
19	1477	LOCTITE™ #242 BLUE 0.5 CC BOTTLE	1	
20	42342	SCREW, HFS, ZP, M8-1.25 X 16, CLASS 8.8	2	
21	42542	SCREW HFS, ZP, M6-1.0 X 16	2	
22	42496	RIVNUT FASTENER, HALF HEX LONG FLANGE M6 X 1	2	
23	60002	HOSE, PVC CLEAR .375 DIA. X .50 DIA.(1 FT.)	2	1PC=1FT RIGHT-PUMP (1 FT.) LEFT-PUMP (1 FT.)
24	60001	HOSE, PVC CLEAR .250 DIA. X .375 DIA. (13 FT.)	13	1PC=1FT RIGHT-PUMP (8 FT.) LEFT-PUMP (5 FT.)

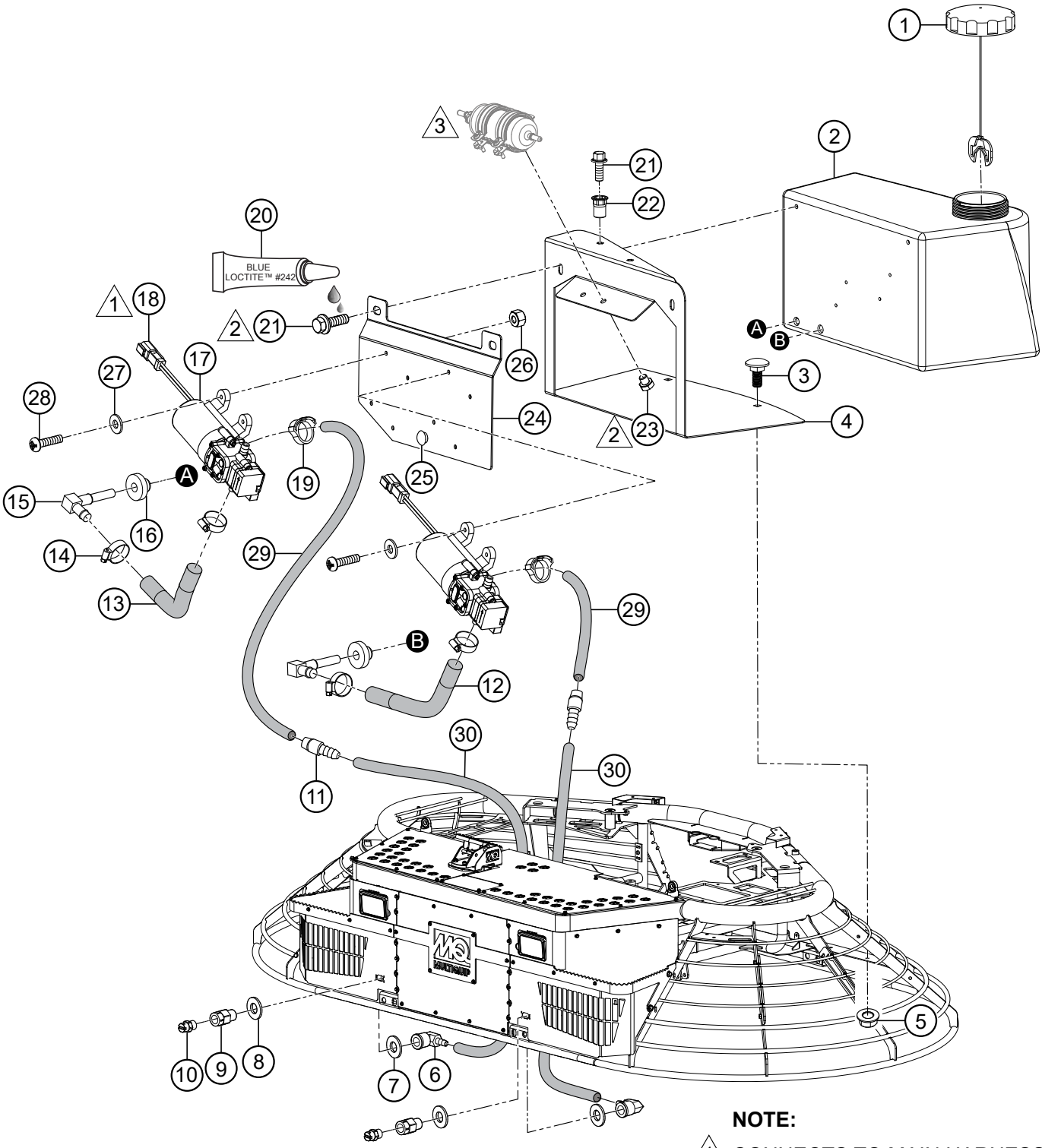

NOTE:

1 CONNECTS TO MAIN HARNESS.

2 APPLY LOCTITE™ #242.

3 SEE FUEL PUMP/FILTER ASSY.

NO.	PART NO.	PART NAME	QTY.	REMARKS
1	42435	CAP, RETARDANT TANK LANYARD, 3.5"	1	
2	42569	TANK, TIER 4 RETARDANT	1	
3	42822	SCREW, CB, M8 X 1.25 X 20	2	
4	42818	BRACKET, RETARDANT TANK	1	
5	23802	NUT, HEX FLANGE M8-1.25 SERRATED	2	
6	2912	FITTING, BRASS 90° 4BARB-1/4"FP	2	
7	16630	WASHER, FLAT SAE 1/2"	2	
8	2898	WASHER, BONDED NEOPRENE 1" X 1/2"	2	
9	42637	CHECK VALVE, 1/4" MNPT X 1/4" FNPT 3PSI	2	
10	392292	NOZZLE, SPRAY	2	
11	10022	FITTING, PLASTIC 6BARB-4BARB	2	
12	60021	HOSE, 3/8 ID X 5/8 OD, BRAIDED PVC, 0.88 FEET	1	1PC=1FT
13	60021	HOSE, 3/8 ID X 5/8 OD, BRAIDED PVC, 0.56 FEET	1	1PC=1FT
14	15538	CLAMP, HOSE WORM #6, 7/16" TO 7/8"	4	
15	29677	FITTING, 90™ 6BARB X 6-4BARB TRUTANK SCREEN	2	
16	19633	BUSHING, RUBBER FUEL	2	
17	30560	PUMP, SPRAY, W/ FEMALE CON BODY	2	INCLUDESITEMSW/$
18$	37402	CONNECTOR KIT	2	
19	2918	CLAMP, HOSE PLASTIC	2	
20	1477	LOCTITE™ #242 BLUE 0.5 CC BOTTLE	1	
21	42542	SCREW HFS, ZP, M6-1.0 X 16	4	
22	42496	RIVNUT FASTENER, HALF HEX LONG FLANGE M6 X 1	2	
23	42937	SCREW, HHC M8-1.25 X 8 MM	2	
24	30558	BRACKET, SPRAY PUMP MOUNT, HTX/STX	1	
25	21597	BUMPER, STEM 1.0" D X .5S X .31	1	
26	10019	NUT, NYLOC 10-32	8	
27	2203	WASHER, FLAT, #10	8	
28	8133	SCREW, PHP 10-32 X 3/4	8	
29	60002	HOSE, PVC CLEAR .375 DIA. X .50 DIA.(1 FT.)	2	1PC=1FT RIGHT-PUMP (1 FT.) LEFT-PUMP (1 FT.)
30	60001	HOSE, PVC CLEAR .250 DIA. X .375 DIA. (13 FT.)	13	1PC=1FT RIGHT-PUMP (8 FT.) LEFT-PUMP (5 FT.)

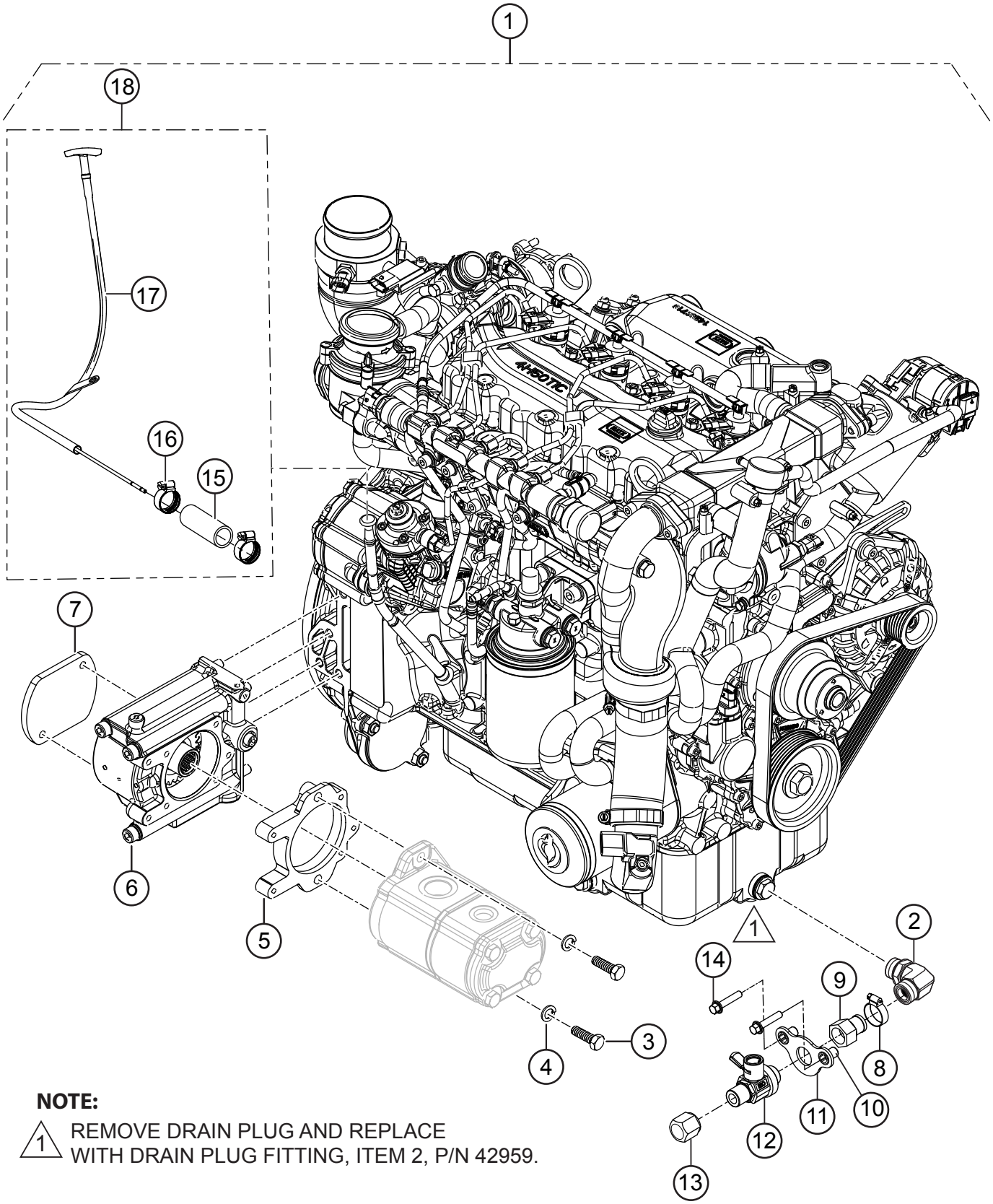

NOTE:

1 REMOVE DRAIN PLUG AND REPLACE WITH DRAIN PLUG FITTING, ITEM 2, P/N 42959.

NO.	PART NO.	PART NAME	QTY.	REMARKS
1	42602	ENGINE ASSY., HATZ 4H50TIC	1	INCLUDES ITEMS W/#
2#	42959	FITTING, DRAIN PLUG L, 22 MM X 1.5	1	
3#	1023	SCREW, HHC 3/8"-16 X 1-1/4" GRD 5	2	
4#	0166 A	WASHER, LOCK, 3/8" MEDIUM	2	
5#	42602-09	ADAPTER, 4 TO 2 HOLE, PTO	1	
6#	42602-02	PTO, FLYWHEEL	1	
7#	42602-08	COVER PLATE,PTO	1	
8#	15538	CLAMP, HOSE WORM #6, 7/16" TO 11/16"	2	
9#	42640	ADAPTER, M18-1.5 FEMALE TO 5/8" BARB	1	
10#	42496	RIVNUT FASTENER, HALF HEX LONG FLANGE M6 X 1	2	
11#	42641	TAB, OIL DRAIN MOUNT	1	
12#	42563	VALVE, OIL DRAIN18 MM	1	
13#	10491	FITTING, CAP 3/8" PIPE HEX HEAD	1	
14#	42347	SCREW, HFS, M6-1.0 X 30 ZP	2	
15#$	60170	HOSE, 3/8" ID. OIL	1	1PC=1FT
16#$	42960	CLAMP, STEPLESS EAR #19.2	2	
17#$	42935	DIPSTICK, REAR FACING	1	
18#	42969	DIPSTICK ASSY.	1	INCLUDES ITEMS W/$

ENGINE MOUNTING ASSY. (RIGHT/LEFT)

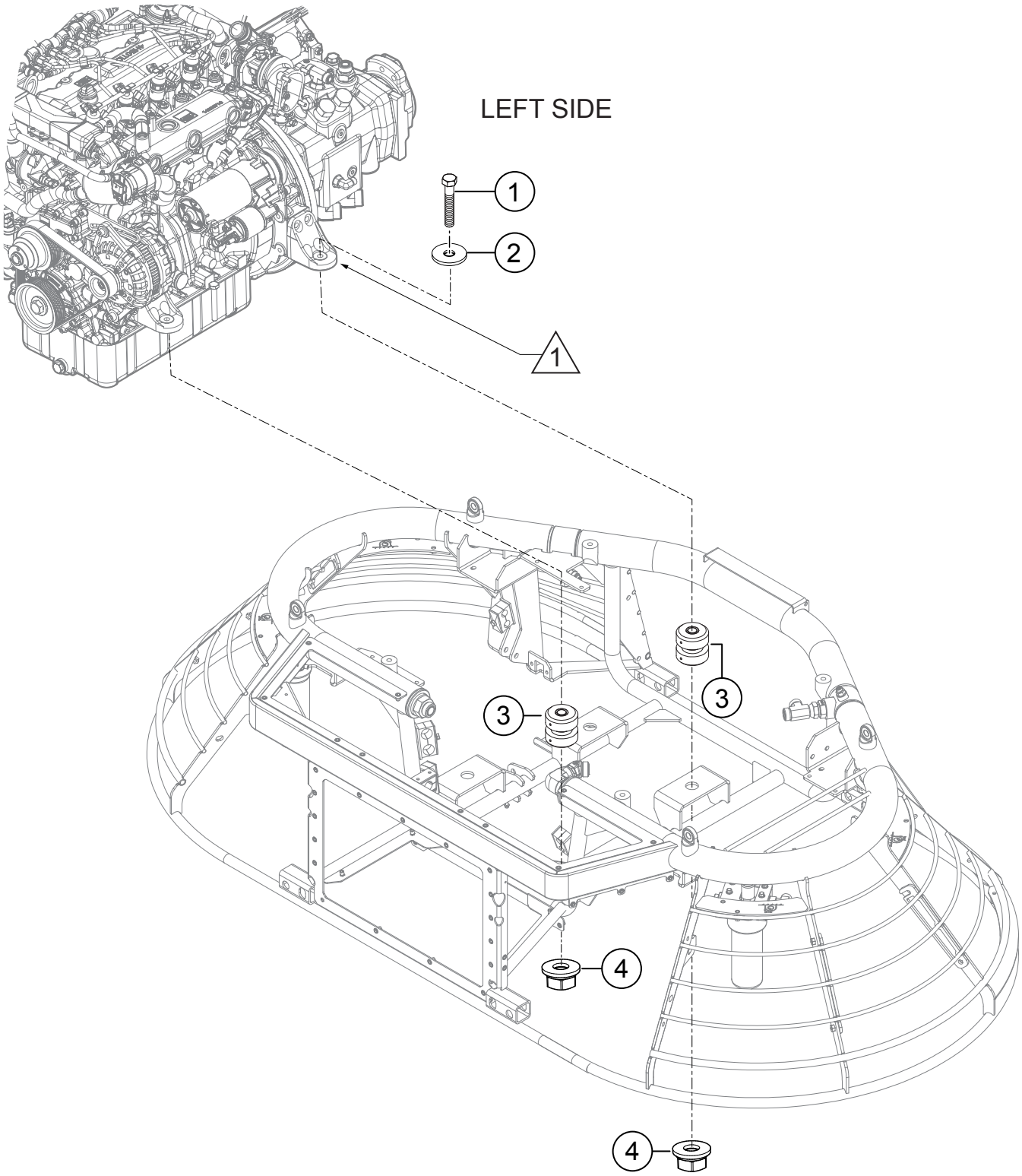

NOTE:

1 INCLUDED WITH ENGINE.

ENGINE MOUNTING ASSY. (RIGHT/LEFT)

NO.	PART NO.	PART NAME	QTY.	REMARKS
1	42888	SCREW, HHC M10-1.50 X 75 MM, GRD 10.9	4	
2	940358	WASHER, FLAT, 10 MM ID. X 20 MM OD.	4	
3	42709	MOUNT, ENGINE ISOLATOR	4	
4	42889	NUT, HEX NYLOC, M10-1.50, GRD 10.9	4	

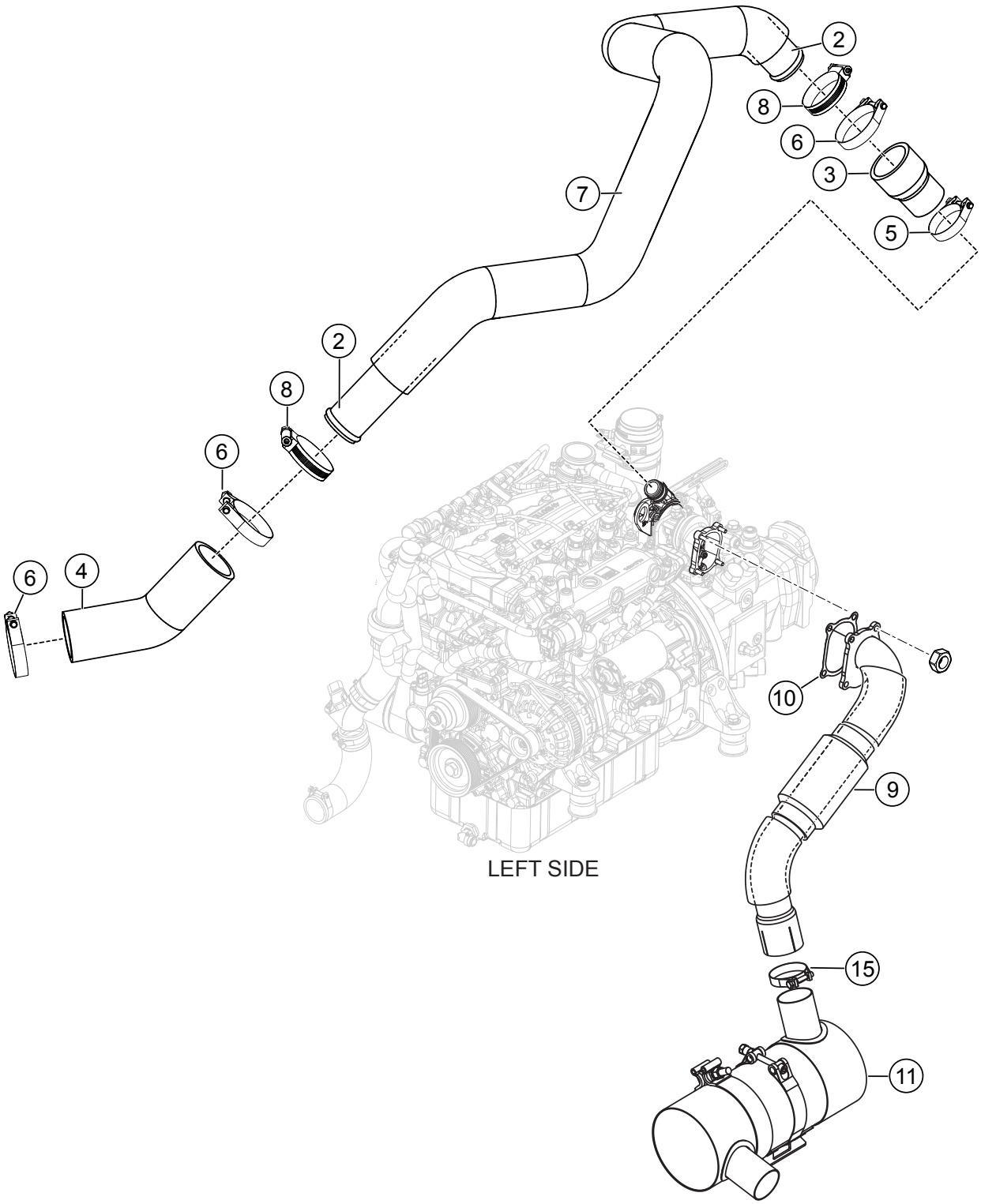
2
8
6
3
5
7
2
8
6
6
4
10
9
LEFT SIDE
15
11

NO.	PART NO.	PART NAME	QTY.	REMARKS
2	42739	PIPE, HOT SIDE	1	
3	42744	SILICONE BOOT, 1.75" X 35 MM	1	
4	42759	SILICONE BOOT, 45°, 1.75" X 1.75"	1	
5	42842	CLAMP, T-BOLT, 43 - 47 MM	1	
6	42841	CLAMP, T-BOLT, 52-59 MM	3	
7	60160	SLEEVE, FIBER GLASS INSULATION 1.5 IN.....	4.....	1PC=1FT
8	962015	CLAMP, WORM #28	2	
9	42691	HEADER, EXHAUST, HATZ	1	
10	42602-12	GASKET, EXHAUST, TURBO TO DOC	1	
11	42602-10	DOC, EXHAUST CANISTER	1	
15	42841	CLAMP, T-BOLT, 52-59 MM	1	

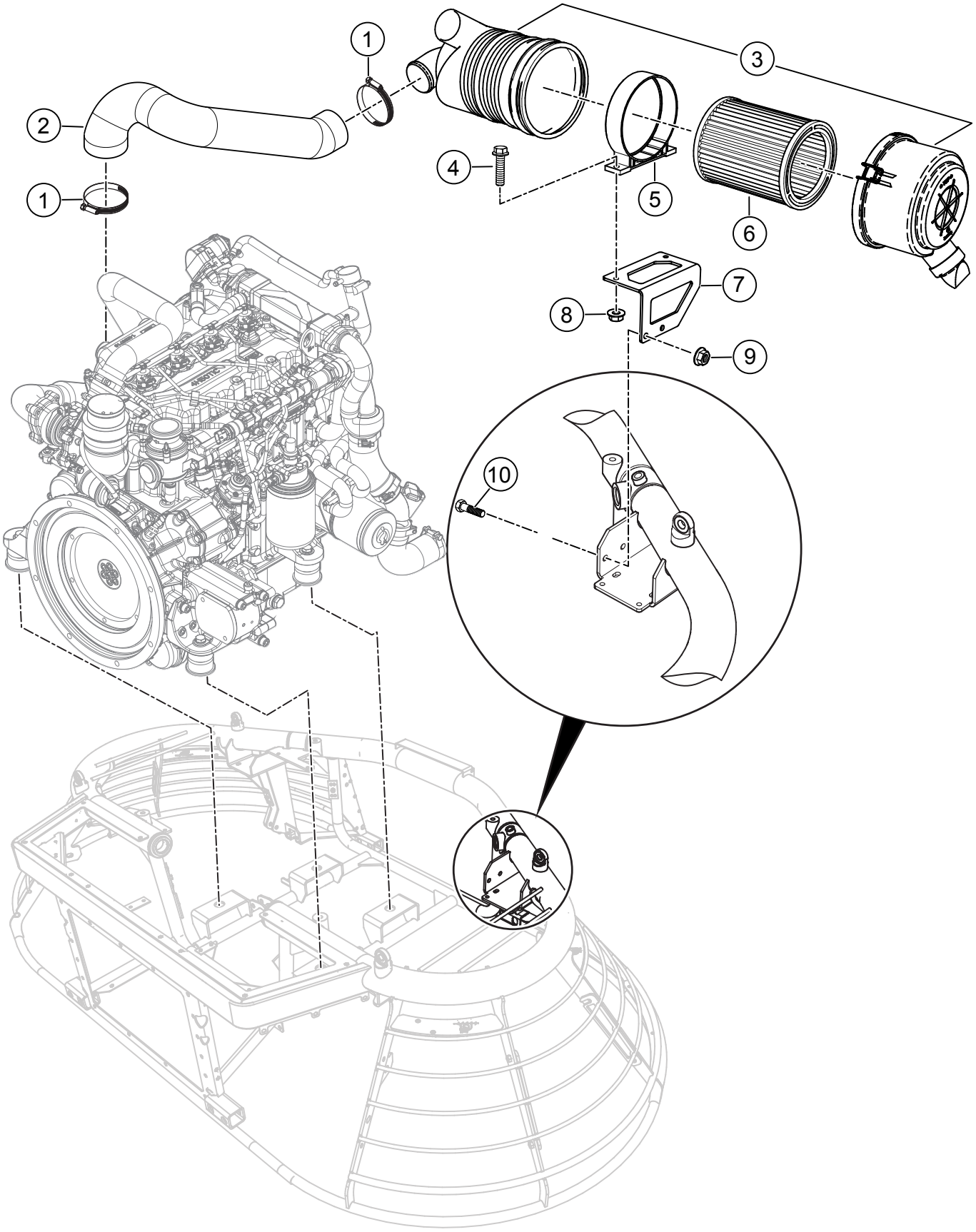
1
2
1
3
4
5
6
7
8
9
10

NO.	PART NO.	PART NAME	QTY.	REMARKS
1	29218	CLAMP, HOSE WORM #48	2	
2	42746	HOSE, INLET AIR	1	
3	42702	FILTER, AIR 90°	1	
4	42436	SCREW, HFS, ZP, M8-1.25 X 25	2	
5	42703	MOUNT, AIR FILTER	1	
6	42702-1	ELEMENT, AIR FILTER	1	
7	42707	PLATE, AIR CLEANER MOUNT	1	
8	23802	NUT, HEX FLANGE M8-1.25 SERRATED	2	
9	42353	NUT, HEX, SERRATED-FLANGE, M10 -1.5	2	
10	21584	SCREW, HHC M10-1.5 X 35 MM, GRD 10.9	2	

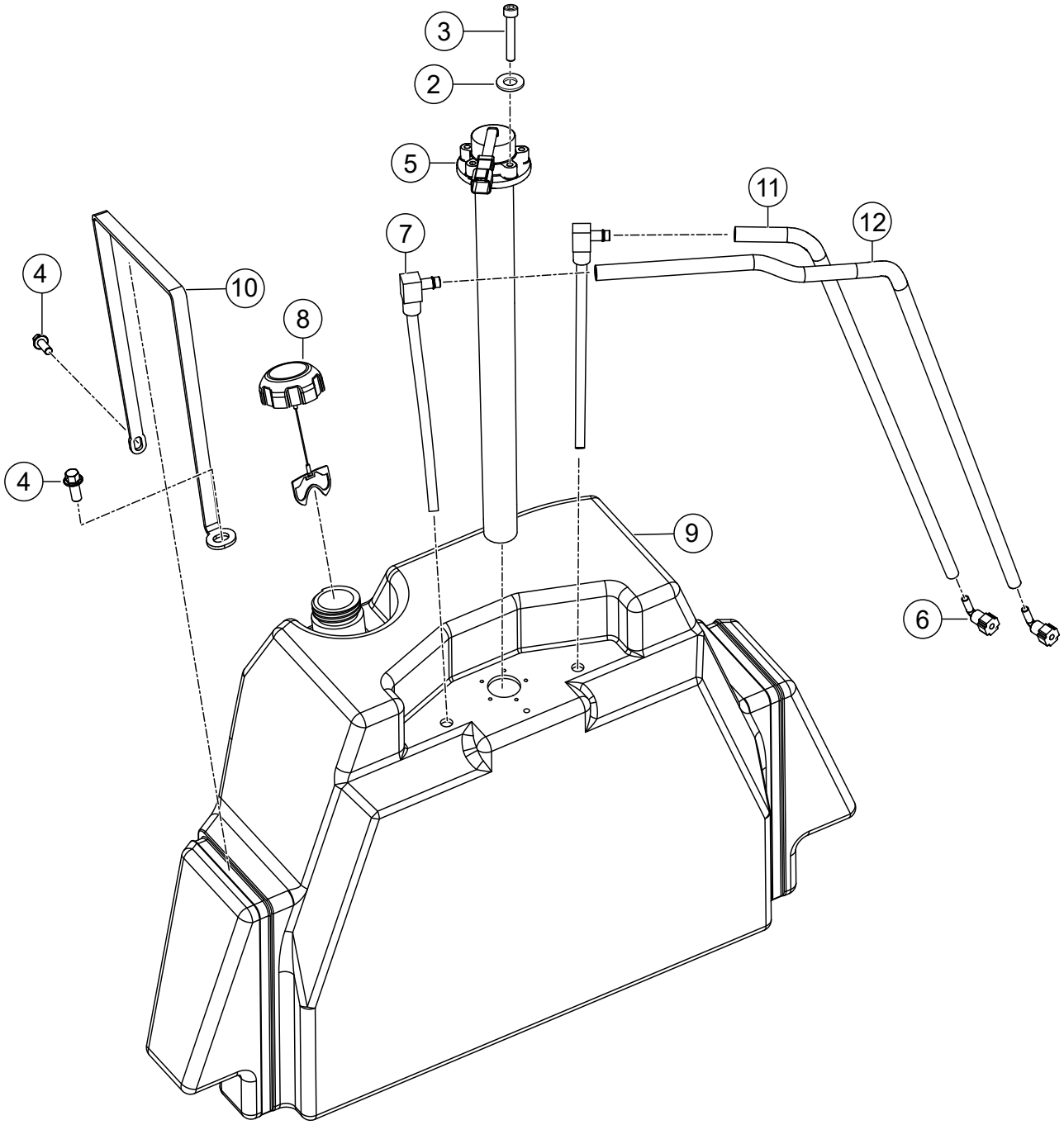
3
2
5
11
12
7
4
10
8
4
9
6

NO.	PART NO.	PART NAME	QTY.	REMARKS
2	28922-058	WASHER, M5	5	
3	37325	SCREW, SHC M5 - 0.8 X 30 MM	5	
4	42343	SCREW, HFS, ZP, M8-1.25 X 20	4	
5	42423	SENDING UNIT, FUEL	1	
6	42458	FITTING, FUEL .312, 90° SAE	2	
7	43045	LINE, FUEL TANK PICK UP	2	
8	42799	CAP, YELLOW DIESEL W/LANYARD	1	
9	42962	TANK, 20 GALLONS	1	
10	42964	STRAP, FUEL TANK	2	
11	47254	LINE, FUEL OUTLET	1	
12	42758	LINE, FUEL INLET	1	

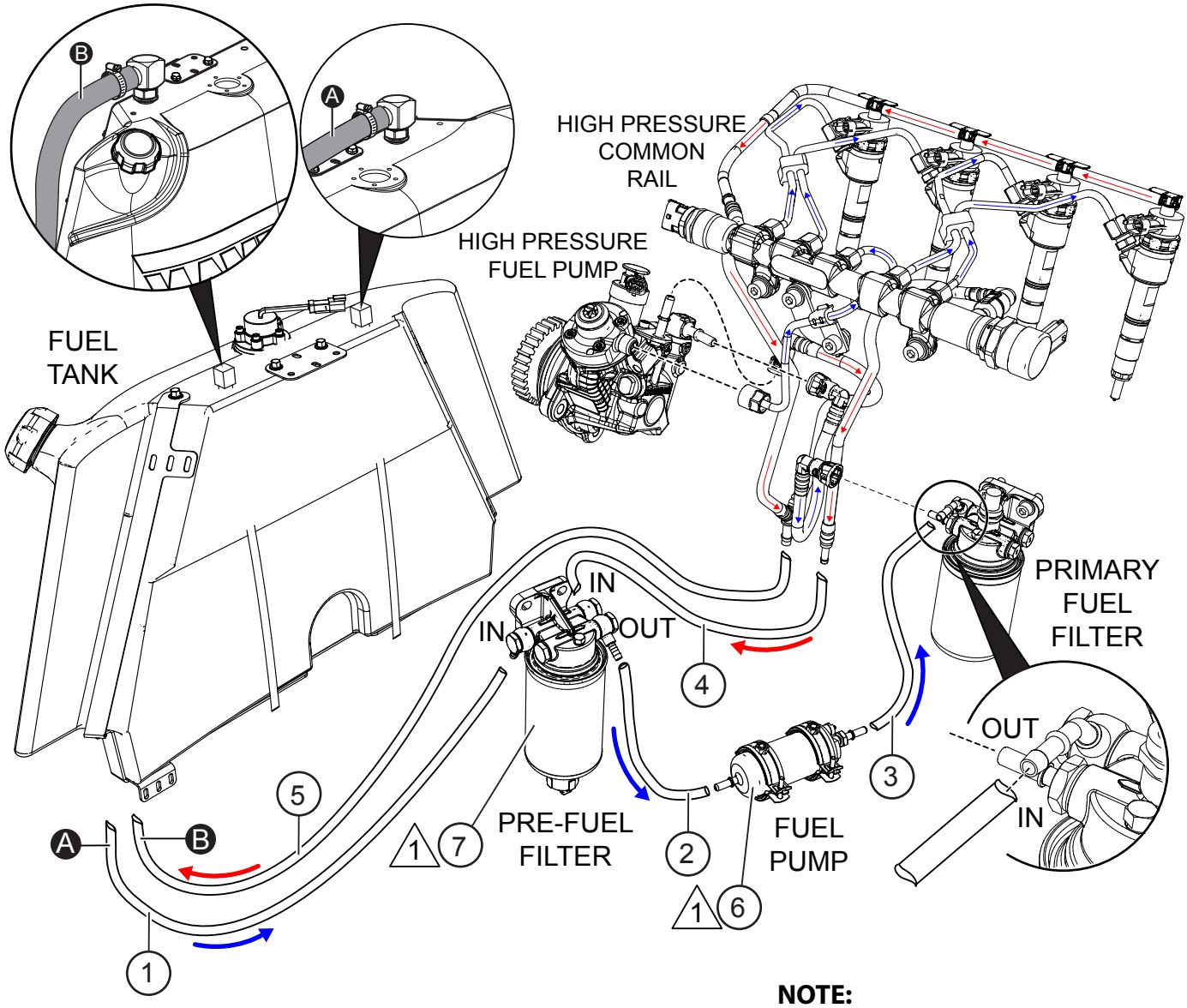

NOTE:

1 INCLUDED WITH ENGINE.

FUEL PUMP AND FUEL FILTER ASSY.

NO.	PART NO.	PART NAME	QTY.	REMARKS
1	42754	LINE, FUEL, TANK TO PRE-FILTER, 2.58 FT. (31")	3	1PC=1FT
2	42755	LINE, FUEL, PRE-FILTER TO SUPPLY PUMP, 2.13 FT. (25.5")	3	1PC=1FT
3	42756	LINE, SUPPLY, PUMP TO MAIN FILTER, 2.46 FT. (29.5")	3	1PC=1FT
4	42757	LINE, FUEL, RETURN RAIL TO PRE-FILTER, 1.75 FT. (21")	2	1PC=1FT
5	42758	LINE, FUEL, ENGINE RETURN TO TANK, 5.25 FT. (63")	6	1PC=1FT
6	42602-04	PUMP, FUEL	1	INCLUDED W/ENGINE
7	42602-06	PRE-FILTER, FUEL	1	INCLUDED W/ENGINE

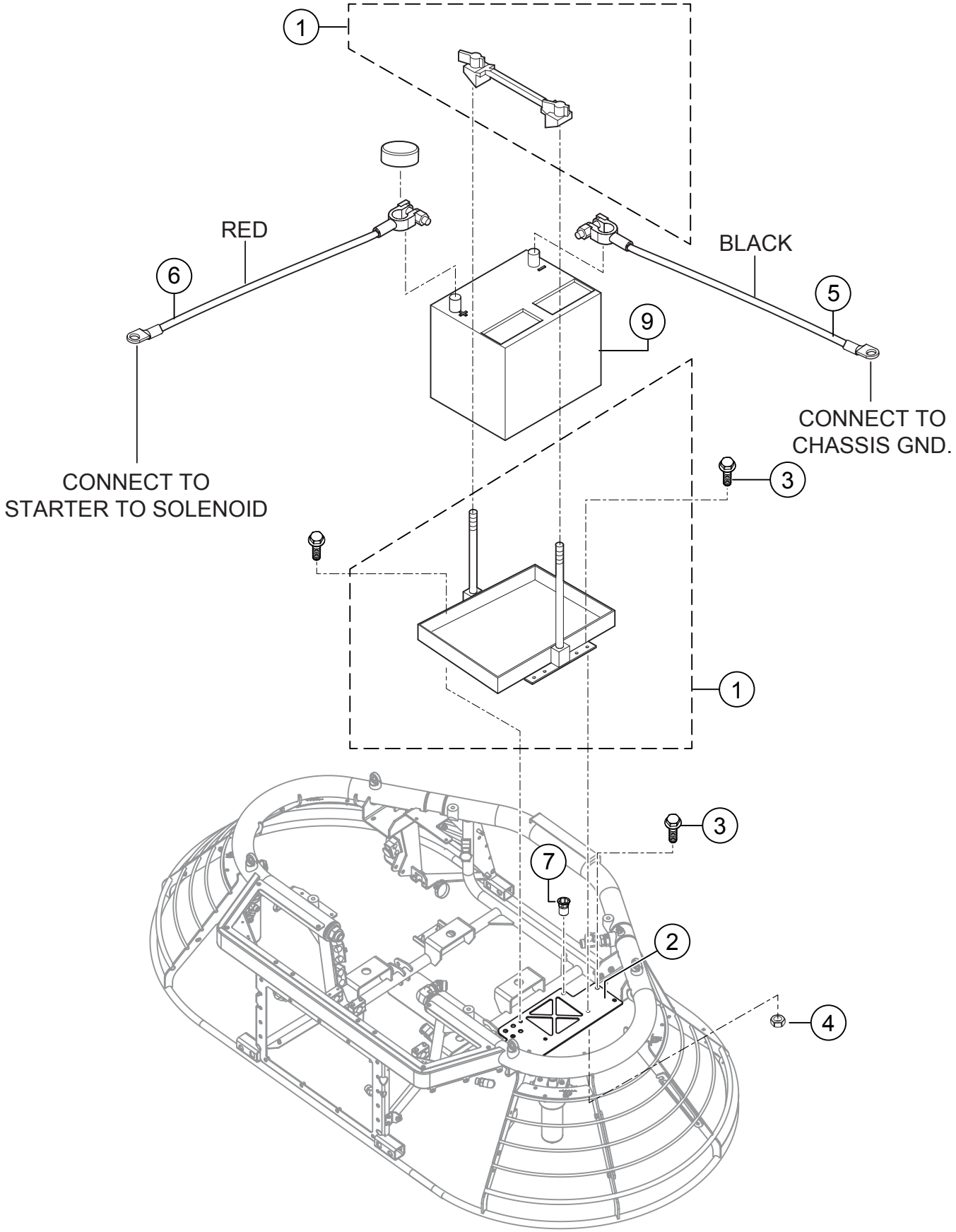
1
RED
6
BLACK
5
9
CONNECT TO
CHASSIS GND.
CONNECT TO
STARTER TO SOLENOID
3
1
3
7
2
4

NO.	PART NO.	PART NAME	QTY.	REMARKS
1	29661	TRAY, BATTERY KIT	1	
2	42634	PLATE, BATTERY	1	
3	42436	SCREW, HFS, ZP, M8-1.25 X 25	6	
4	23802	NUT, HEX FLANGED M8-1.25	6	
5	12278	CABLE, BATTERY NEG. 4 GA. X 32 X 3/8"	1	
6	19303	CABLE, BATTERY POS. 4 GA. X 48" POST	1	
7	42496	RIVNUT FASTENER, HALF HEX LONG FLANGE, M6 X 1	4	
9	404006	BATTERY, SEALED, GROUP 34M	1	

RADIATOR MOUNTING HARDWARE ASSY.

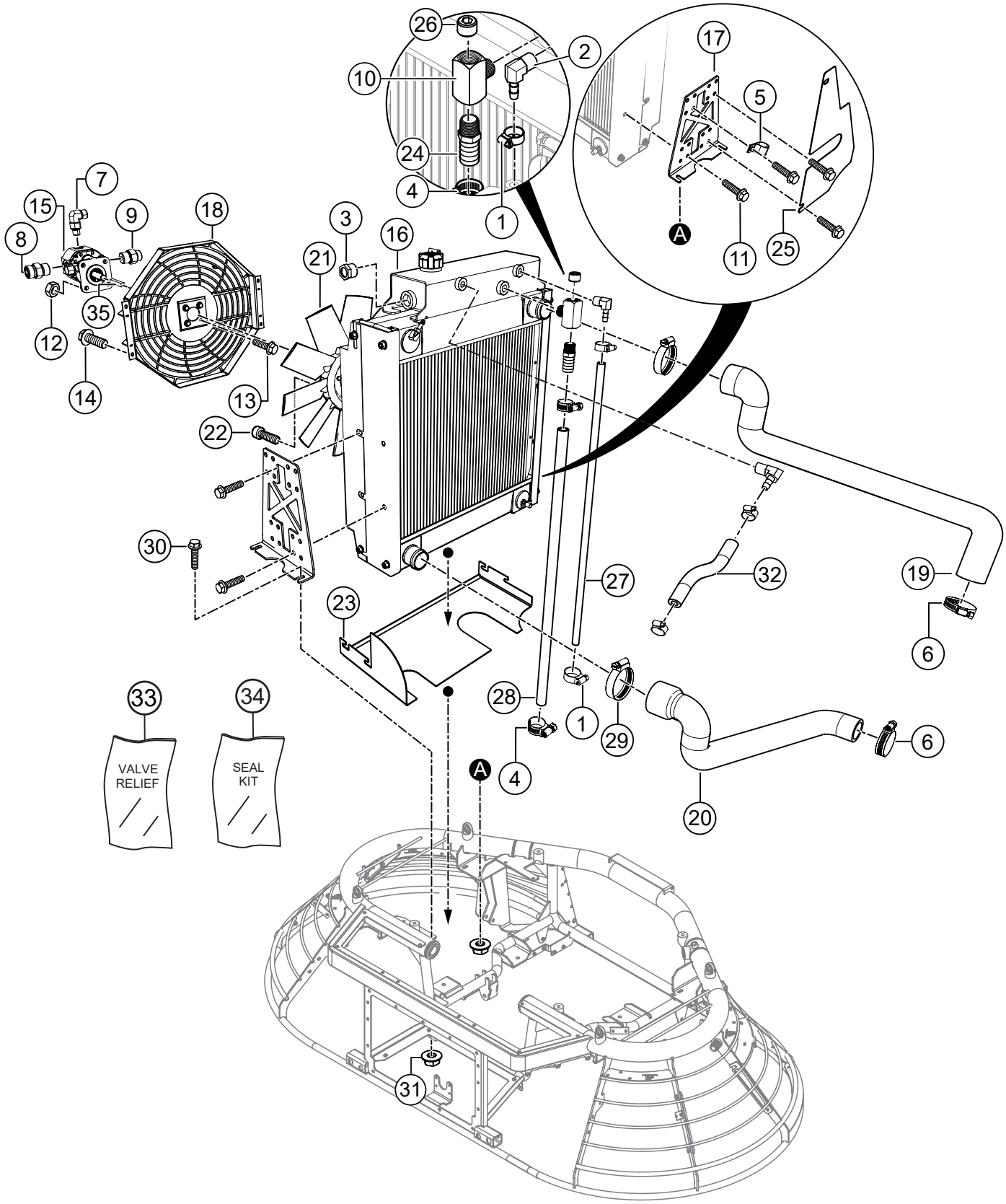

RADIATOR MOUNTING HARDWARE ASSY.

NO.	PART NO.	PART NAME	QTY.	REMARKS
1	19473	CLAMP, HOSE WORM #2, 1/4" TO 5/8"	4	
2	17206	FITTING, 90° 5BARB - 1/4" MP	2	
3	21033	SIGHT GLASS, 3/4" NPT, STEEL, NO BALL	1	
4	23119	CLAMP, HOSE WORM, LINED SS. 3/4" TO 1 1/8"	2	
5	25647	CLAMP, HOSE 3/4" LOOP X .406 HOLE	1	
6	26405	CLAMP, HOSE WORM #20	2	
7	32347	FITTING, 90° 4MORFS X 4MOR	1	
8	32425	FITTING, STRAIGHT 8MORFS X 8MOR	1	
9	32716	FITTING, STRAIGHT 6MORFS X 8MOR	1	
10	367727	FITTING, TEE 3/8"FP-3/8"MP-3/8"FP	1	
11	42342	SCREW, HFS, ZP, M8-1.25 X 16	8	
12	42344	NUT, NYLOC, M8-1.25	4	
13	42436	SCREW, HFS, ZP, M8-1.25 X 25	4	
14	42542	SCREW, HFS, ZP, M6-1.0 X 16	4	
15	42613	MOTOR, 3.7 CC FIXED GEAR	1	
16	42706	COOLER, HATZ 4H50TIC ENGINE	1	
17	42712	BRACKET, RADIATOR	2	
18	42723	MOUNT, 17" RADIATOR FAN	1	
19	42732	HOSE, UPPER RADIATOR	1	
20	42745	HOSE, LOWER RADIATOR	1	
21	42833	FAN, 17" STRAIGHT BLADE	1	
22	42944	SCREW, SHC 10-24 X 1-1/4"	3	
23	42951	AIR SHIELD, LOWER RADIATOR	1	
24	42956	FITTING, STRAIGHT 3/8" MP - 10BARB, BRASS	1	
25	42957	AIR SHIELD, REAR	1	
26	5016b	FITTING, PLUG 3/8"MP	1	
27	60016	HOSE, COOLANT, 5/16" ID., 2.84 FEET	3	1PC=1FT
28	60019	HOSE, COOLANT, 5/8" ID., 2.34 FEET	3	1PC=1FT
29	962015	CLAMP, WORM #28	2	
30	42436	SCREW, HFS, ZP, M8-1.25 X 25	4	
31	23802	NUT, HEX FLANGE M8-1.25 SERRATED	4	
32	60016	HOSE, COOLANT, 5/16" ID., 0.5 FEET	1	1PC=1FT
33	42613-01	VALVE, RELIEF	1	
34	42613-02	KIT, SEAL	1	
35	37269	KEY, SQUARE 1/8 X 3/4	1	

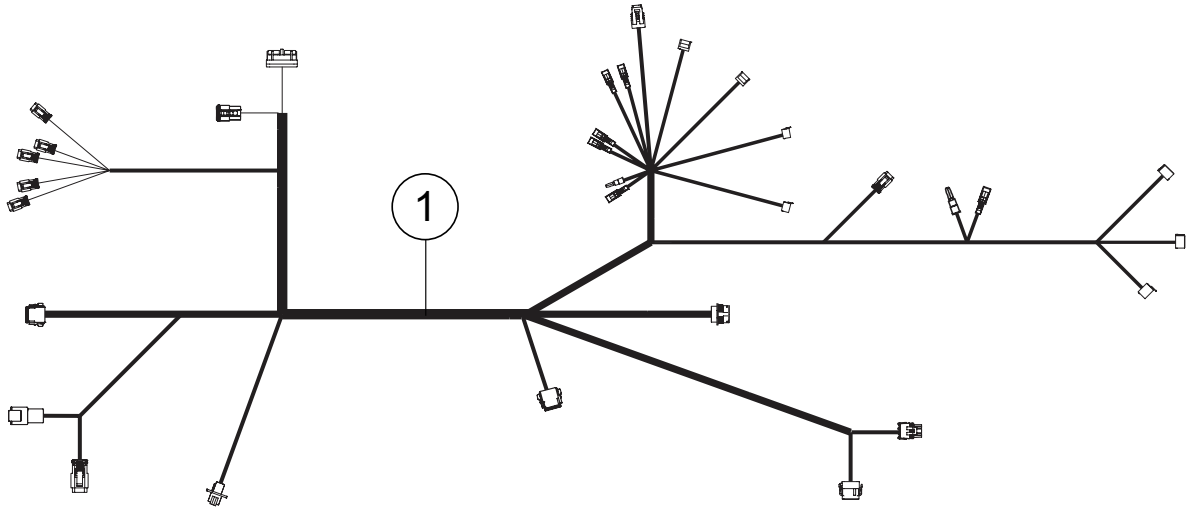
1

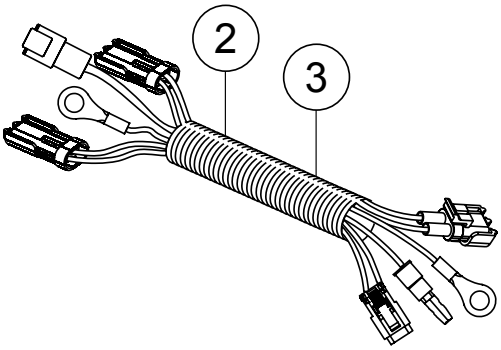
2
3

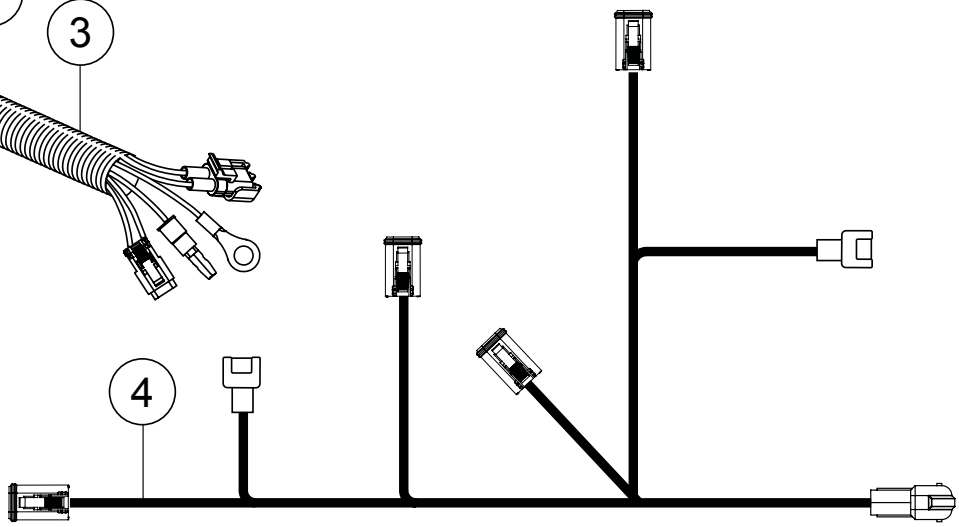
4

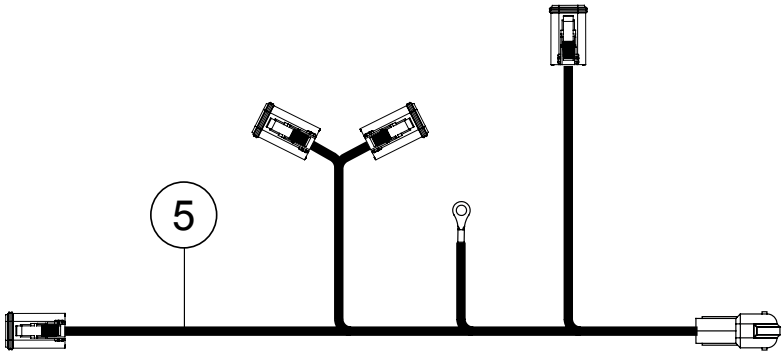
5

6
7

NO.	PART NO.	PART NAME	QTY.	REMARKS
1	42699	HARNESS, LH CONSOLE	1	
2	42700	HARNESS, RH CONSOLE, POWER VIEW	1	
3	42571	HARNESS, MAIN	1	
4	42265	HARNESS, FILTER CONNECTION	1	
5	42646	HARNESS, FT PLATFORM	1	
6	22796	HARNESS, SEAT SWITCH	1	
7	42265	HARNESS, FILTER CONNECTION	1	

PARTS MANUAL

HERE'S HOW TO GET HELP

PLEASE HAVE THE MODEL AND SERIAL NUMBER ON-HAND WHEN CALLING

UNITED STATES

Multiquip Inc.

(310) 537- 3700
6141 Katella Avenue Suite 200
Cypress, CA 90630
E-MAIL: mq@multiquip.com
WEBSITE: www.multiquip.com

CANADA

Multiquip

(450) 625-2244
4110 Industriel Boul.
Laval, Quebec, Canada H7L 6V3
E-MAIL: infocanada@multiquip.com

UNITED KINGDOM

Multiquip (UK) Limited Head Office

0161 339 2223
Unit 2, Northpoint Industrial Estate,
Globe Lane,
Dukinfield, Cheshire SK16 4UJ
E-MAIL: sales@multiquip.co.uk

© COPYRIGHT 2020, MULTIQUIP INC.

Multiquip Inc, the MQ logo are registered trademarks of Multiquip Inc. and may not be used, reproduced, or altered without written permission. All other trademarks are the property of their respective owners and used with permission.

This manual MUST accompany the equipment at all times. This manual is considered a permanent part of the equipment and should remain with the unit if resold.

The information and specifications included in this publication were in effect at the time of approval for printing. Illustrations, descriptions, references and technical data contained in this manual are for guidance only and may not be considered as binding. Multiquip Inc. reserves the right to discontinue or change specifications, design or the information published in this publication at any time without notice and without incurring any obligations.

MULTIQUIP®

PN: 13407

Parchem Construction Supplies Pty Ltd

1956 Dandenong Road, Clayton VIC 3168, Australia
Phone: 1300 353 986
flextool.com.au
ABN 80 069 961 968

This manual summarises our best knowledge of the product based on the information available at the time of publication. You should read this manual carefully and consider the information in the context of how the product will be used. Our responsibility for products sold is subject to our standard terms and conditions of sale.

DISCLAIMER:

Any advice, recommendation, information, assistance or service provided by us in this manual is given in good faith and is believed by us to be appropriate and reliable. However, any advice, recommendation, information, assistance or service provided by us is provided without liability or responsibility PROVIDED THAT the foregoing shall not exclude, limit, restrict or modify the right entitlements and remedies conferred upon any person or the liabilities imposed upon us by any condition or warranty implied by Commonwealth, State or Territory Act or ordinance void or prohibiting such exclusion limitation or modification. The product can be expected to perform as indicated in this manual so long as operation and operational procedures of the individual products are followed as recommended in this manual.

Design and technical specifications may be subject to changes.

© This publication is copyright. All rights are reserved. Flextool is a registered trade mark of Parchem Construction Supplies Pty Ltd. Multiquip, MQ and Whiteman are registered trade marks of Multiquip Inc.

FOR MORE INFORMATION
CONTACT US ON 1300 353 986 OR VISIT flextool.com.au

EXCLUSIVE TO